Compact Cylinder With Solenoid Valve

Valve and compact cylinder integrated for compactness

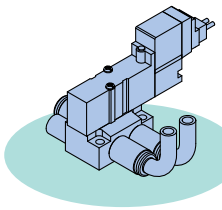

Solenoid valve

+

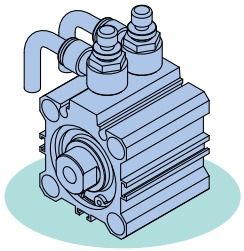

Compact cylinder

=

New

Bore sizes ø50, ø63 added.

Labor saving

- No need to select size of valve
- Less piping work

Energy saving

Air consumption between the valve and cylinder reduced by approximately 50%.

Space saving

Small mounting space with valve integrated structure

Series CVQ

SMC

CAT.ES20-182B

Easy Mounting

Height Comparison (Dimensional difference: C)

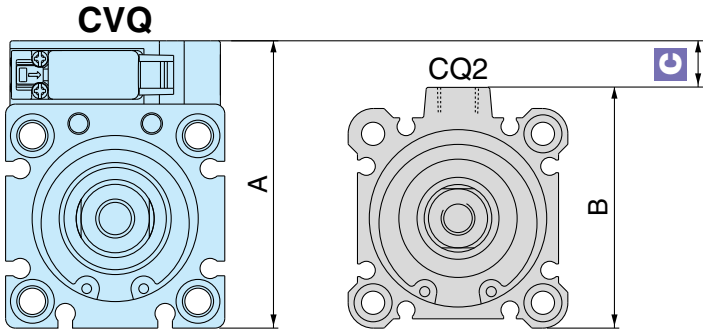

(mm)

Bore size	A	B	C
32	59	49.5	**9.5**
40	67	57	**10**
50	83	71	**12**
63	97	84	**13**

Mounting Example

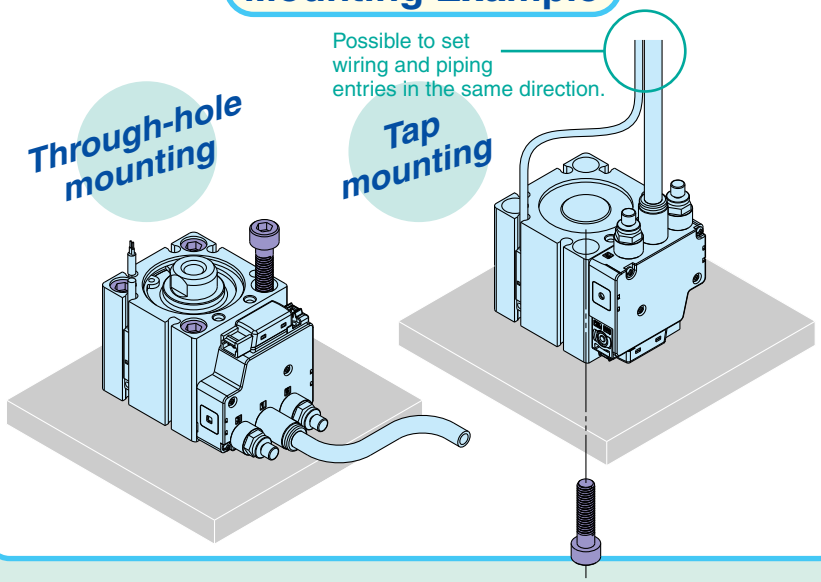

Selectable Piping Direction

Low Air Consumption

Approx. 50% reduction in air consumption by reducing the piping between the valve and cylinder

- Cylinder bore size: ø32 mm
- Cylinder stroke: 30 mm
- Piping: I.D. ø4 mm
  Length 2 m

Variation

Bore size (mm)	Standard stroke (mm)											
	5	10	15	20	25	30	35	40	45	50	75	100
32	●	●	●	●	●	●	●	●	●	●	●	●
40	●	●	●	●	●	●	●	●	●	●	●	●
50	—	●	●	●	●	●	●	●	●	●	●	●
63	—	●	●	●	●	●	●	●	●	●	●	●

Compact Cylinder With Solenoid Valve

Series CVQ

ø32, ø40, ø50, ø63

CE

How to Order

CVQ B 32 – 30 ☐ – M9BW ☐ – 5 M ☐ ☐ ☐ ☐

Mounting

B	Through-hole, Both ends tapped (Standard)
L	Foot
F	Rod flange
G	Head flange
D	Double clevis

∗ Mounting brackets are included, (but not assembled).

Bore size

32	32 mm
40	40 mm
50	50 mm
63	63 mm

Cylinder stroke (mm)

Please refer to the next page for "Standard Stroke" and "Intermediate Stroke".

Body option

Nil	Standard (Rod end female thread)
F	With boss in head end
M	Rod end male thread

The combination of body options is available.
Example) FM

Auto switch

Nil	Without auto switch (Built-in magnet)

∗ For applicable auto switch models, refer to the below table.

Number of auto switches

Nil	2 pcs.
S	1 pc.
N	"n" pcs.

Rated voltage

5	24 VDC
6	12 VDC

Port thread type

Nil	M5 x 0.8	ø32 ø40
	Rc	ø50 ø63
F	G	
N	NPT	

Piping

Nil	Standard
P	Axial

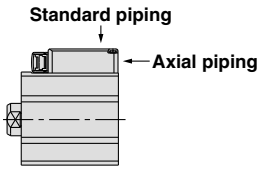

Manual override

Nil	Non-locking push type
B	Locking slotted type

Surge voltage suppressor

Nil	Without surge voltage suppressor
S	With surge voltage suppressor
Z	With light/surge voltage suppressor
R	With surge voltage suppressor (Non-polar type)
U	With light/surge voltage suppressor (Non-polar type)

Electrical entry

M	MO
M-type plug connector with lead wire (300 mm)	M-type plug connector without connector

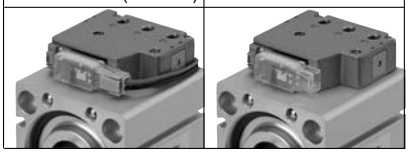

∗ For lead wire lengths other than 300 mm, refer to the plug connector lead wire (page 5).

Applicable Auto Switches / Refer to pages 14 through to 16 for detailed auto switch specifications.

Type	Special function	Electrical entry	Indicator light	Wiring (Output)	Load voltage DC		Load voltage AC	Auto switch model: Electrical entry Perpendicular	Auto switch model: Electrical entry In-line	Lead wire length (m)∗ 0.5 (Nil)	1 (M)	3 (L)	5 (Z)	Pre-wired connector	Applicable load	
Solid state switch	—	Grommet	Yes	3-wire (NPN)	24 V	5V, 12V	—	M9NV	M9N	●	●	●	○	○	IC circuit	Relay, PLC
				3-wire (PNP)				M9PV	M9P	●	●	●	○	○		
				2-wire		12V		M9BV	M9B	●	●	●	○	○	—	
	Diagnostic indication (2-color indication)			3-wire (NPN)		5V, 12V		M9NWV	M9NW	●	●	●	○	○	IC circuit	
				3-wire (PNP)				M9PWV	M9PW	●	●	●	○	○		
				2-wire		12 V		M9BWV	M9BW	●	●	●	○	○	—	
Reed switch	—	Grommet	Yes	3-wire (NPN equivalent)	—	5 V	—	A96V	A96	●	—	●	—	—	IC circuit	—
				2-wire	24 V	12 V	100 V	A93V	A93	●	—	●	—	—	—	Relay, PLC
			—			5 V, 12 V	100 V or less	A90V	A90	●	—	●	—	—	IC circuit	

∗ Lead wire length symbols: 0.5 m ····· Nil (Example) M9NW
1 m ····· M M9NWM
3 m ····· L M9NWL
5 m ····· Z M9NWZ

∗ Solid state auto switches marked with "○" are produced upon receipt of order.
∗ For details about auto switches with pre-wired connector, refer to pages 1784 and 1785 of the "Best Pneumatics" Vol. 3 catalog.
∗ Auto switches are shipped together (not assembled).

⚠Caution

Do not separate the cylinder from the valve.

JIS Symbol

Double acting: single rod

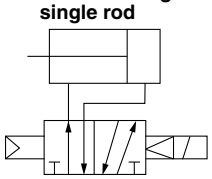

With boss in head end

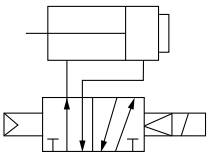

Theoretical Output

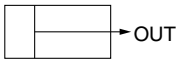

Unit: N

Bore size (mm)	Operating direction	Operating pressure (MPa)		
		0.3	0.5	0.7
32	IN	181	302	422
	OUT	241	402	563
40	IN	317	528	739
	OUT	377	628	880
50	IN	495	825	1150
	OUT	589	982	1370
63	IN	840	1400	1960
	OUT	936	1560	2184

Mounting Bracket Part No.

Bore size (mm)	Foot Note)	Flange	Double clevis
32	CVQ-L032	CVQ-F032	CVQ-D032
40	CVQ-L040	CVQ-F040	CVQ-D040
50	CQ-L050	CQ-F050	CVQ-D050
63	CVQ-L063	CVQ-F063	CVQ-D063

Note) Order two foot brackets per cylinder.
∗ Parts belonging to each bracket are as follows.
Foot, Flange: Body mounting screws
Double clevis: Clevis pin, C-type retaining ring for shaft, Body mounting screws

Cylinder Specifications

Bore size (mm)	32	40	50	63
Action	Double acting, single rod			
Fluid	Air (Non-lube)			
Proof pressure	1.0 MPa			
Maximum operating pressure	0.7 MPa			
Minimum operating pressure	0.15 MPa			
Ambient and fluid temperature	–10 to 50°C (No freezing)			
Stroke tolerance	0 to +1.0 mm∗			
Mounting method	Through-hole / Both ends tapped			
Piston speed	50 to 500 mm/s			
Cushion	Rubber bumper			

∗ Stroke length tolerance does not include variations in the bumper value.

Valve Specifications

Type of actuation	2 position single
Manual override	Non-locking push type / Locking slotted type
Pilot exhaust	Main/Pilot valve common exhaust type
Mounting orientation	Unrestricted (based on cylinder mounting orientation)
Enclosure	Dustproof

Solenoid Specifications

Electrical entry		M-type plug connector
Coil rated voltage	**DC**	24/12 (V)
Allowable voltage fluctuation Note)		±10% of the rated voltage
Power consumption	**DC**	0.35 (With light: 0.4) W
Surge voltage suppressor		Diode (Non-polar type: Varistor)
Indicator light		LED

Note) The S and Z types of surge voltage suppressor have an internal circuit allowing voltage drop, so use within the following allowable voltage fluctuation range.
S, Z type 24 VDC: –7% to +10%
12 VDC: –4% to +10%

Standard Stroke

(mm)

Bore size (mm)	Standard stroke
32 ∗1	5, 10, 15, 20, 25, 30, 35, 40, 45, 50, 75, 100
40	5, 10, 15, 20, 25, 30, 35, 40, 45, 50, 75, 100
50 ∗2	10, 15, 20, 25, 30, 35, 40, 45, 50, 75, 100
63	10, 15, 20, 25, 30, 35, 40, 45, 50, 75, 100

∗1 The outline dimensions for 5 mm stroke will be the same as those for 10 mm stroke.
∗2 The outline dimensions for 10 mm stroke will be the same as those for 15 mm stroke.

Intermediate Stroke

Part no.	Refer to “How to Order” for standard model numbers (previous page).	
Description	Intermediate strokes are available by using spacers with standard stroke cylinders.	
	Bore size	Description
	32	Compatible with strokes of 1 mm increments.
	40, 50, 63	Compatible with strokes of 5 mm increments.
Stroke range (mm)	Bore size	Stroke range
	32	1 to 99
	40, 50, 63	5 to 95
Applicable example	Part no.: CVQB32-95-□ A spacer of 5 mm is installed in standard cylinder CVQB32-100-□. B dimension is 133 mm.	

Weight

Weights

Unit (g)

Bore size (mm)	Stroke											
	5	**10**	**15**	**20**	**25**	**30**	**35**	**40**	**45**	**50**	**75**	**100**
32	295	288	310	332	354	376	398	420	442	464	575	686
40	365	391	417	443	469	495	521	547	573	599	726	853
50	—	735	721	760	800	839	879	918	958	997	1195	1392
63	—	863	905	947	990	1032	1074	1116	1158	1200	1411	1621

Calculation: (Example) **CVQB32-20M**
- Basic moving part weight: CVQB32-20 ····· 88 g
- Additional weight: Rod end male thread ····· 43 g

131 g

Additional Weight

Unit (g)

Bore size (mm)		**32**	**40**	**50**	**63**
Axial piping		5	5	4	4
Connector (300 mm)		3	3	3	3
Rod end male thread	Male thread	26	27	53	53
	Nut	17	17	32	32
With boss in head end		5	7	13	25
Foot (including mounting bolt)		148	160	243	334
Rod flange (including mounting bolt)		185	219	373	569
Head flange (including mounting bolt)		170	203	348	544
Double clevis (including pin, retaining ring, bolt)		156	201	399	574

Mounting Bolt for CVQ

Mounting: Be sure to use it as through-hole when mounting.

Ordering: Add the word, "Bolt" in front of the bolts to be used.

Example) Bolt M5 x 45L: 4 pcs.

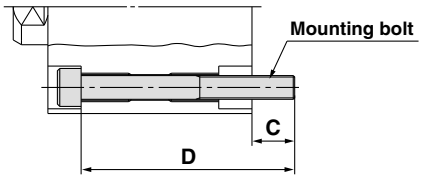

(mm)

Cylinder model	C	D	Mounting bolt size
CVQB32- 5	9	45	M5 x 45L
- 10		45	x 45L
- 15		50	x 50L
- 20		55	x 55L
- 25		60	x 60L
- 30		65	x 65L
- 35		70	x 70L
- 40		75	x 75L
- 45		80	x 80L
- 50		85	x 85L
- 75		110	x 110L
-100		135	x 135L
CVQB40- 5	7.5	45	M5 x 45L
- 10		50	x 50L
- 15		55	x 55L
- 20		60	x 60L
- 25		65	x 65L
- 30		70	x 70L
- 35		75	x 75L
- 40		80	x 80L
- 45		85	x 85L
- 50		90	x 90L
- 75		115	x 115L
-100		140	x 140L

(mm)

Cylinder model	C	D	Mounting bolt size
CVQB50- 10	12.5	60	M6 x 60L
- 15		60	x 60L
- 20		65	x 65L
- 25		70	x 70L
- 30		75	x 75L
- 35		80	x 80L
- 40		85	x 85L
- 45		90	x 90L
- 50		95	x 95L
- 75		120	x 120L
-100		145	x 145L
CVQB63- 10	14.5	60	M8 x 60L
- 15		65	x 65L
- 20		70	x 70L
- 25		75	x 75L
- 30		80	x 80L
- 35		85	x 85L
- 40		90	x 90L
- 45		95	x 95L
- 50		100	x 100L
- 75		125	x 125L
-100		150	x 150L

Allowable Kinetic Energy

Operating pressure: 0.5 MPa

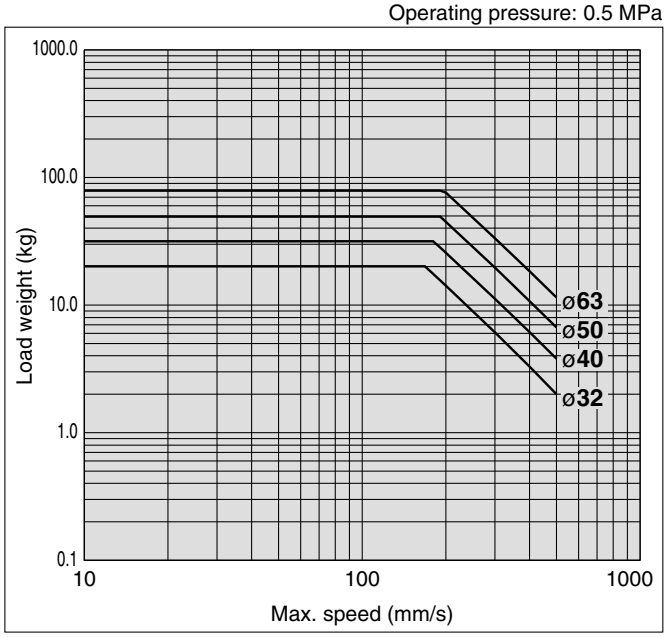

Rod End Allowable Lateral Load

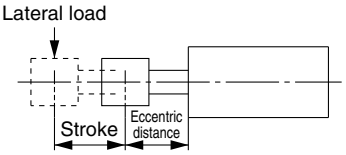

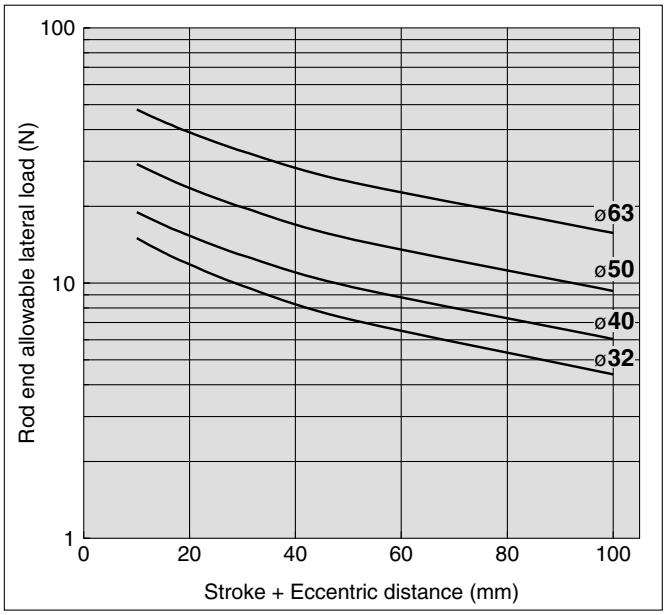

The allowable lateral load applied to the rod end is as shown above. Do not use exceeding the value shown by the graph.

Relationship between Number of Needle Rotations and Piston Speed

ø32, ø40

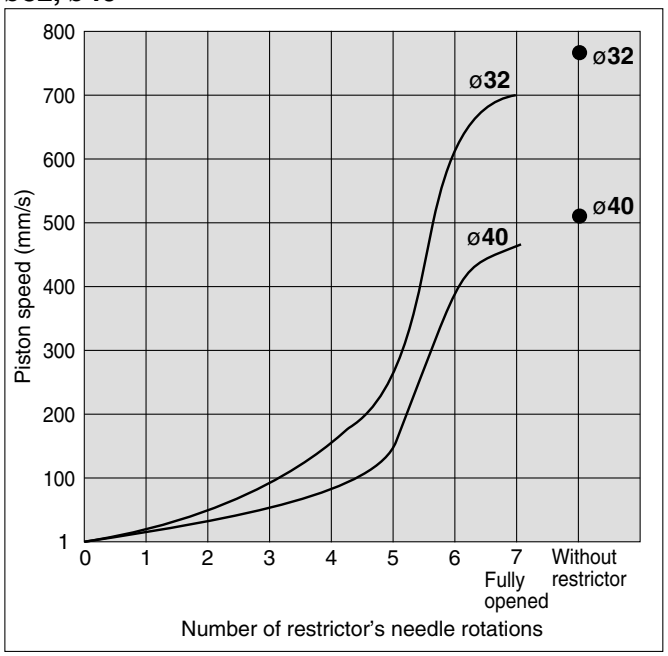

Restrictor: ASN2-M5
Pressure: 0.5 MPa
Mounting orientation: Horizontal, with no load, piston extended
∗ The above piston speed is for reference purpose only.

ø50, ø63

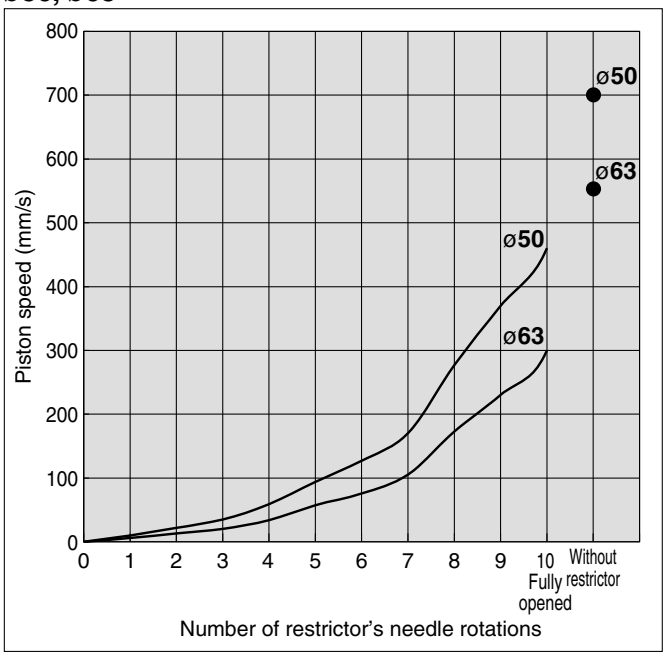

Restrictor: ASN2-01
Pressure: 0.5 MPa
Mounting orientation: Horizontal, with no load, piston extended
∗ The above piston speed is for reference purpose only.

<Exhaust restrictor with silencer>

Applicable bore size (mm)	Model	Port size	Effective area (mm^2)	Weight (g)
32, 40	**ASN2-M5**	M5 x 0.8	1.8	5
50, 63	**ASN2-01**	1/8	3.6	17

Construction

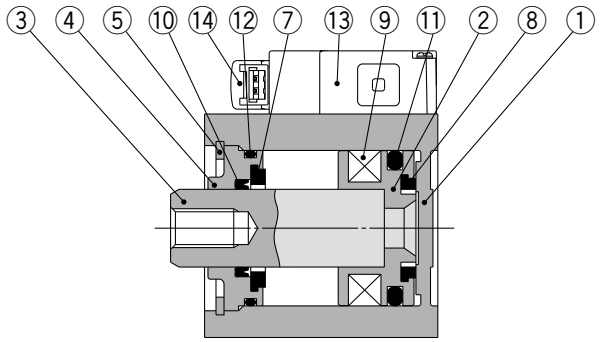

Basic Type

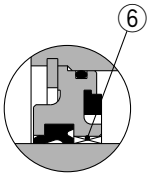

ø50, ø63

With boss in head end

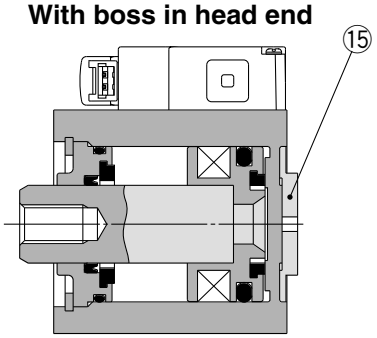

Rod end male thread

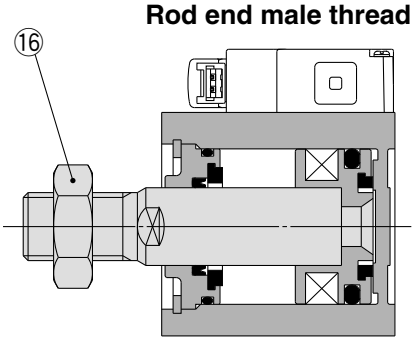

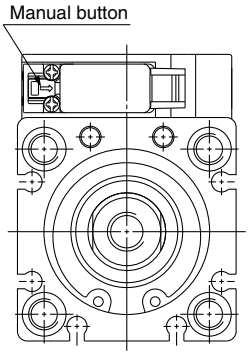

Component Parts

No.	Description	Material	Note
1	**Cylinder tube**	Aluminum alloy	Hard anodized
2	**Piston**	Aluminum alloy	Chromated
3	**Piston rod**	Carbon steel	Hard chrome plated
4	**Collar**	Aluminum alloy casting	ø50, ø63, chromate coating
		Aluminum alloy	Anodized
5	**Retaining ring**	Carbon tool steel	Phosphate coated
6	**Bushing**	Bearing alloy	ø50, ø63
7	**Bumper A**	Urethane	
8	**Bumper B**	Urethane	
9	**Magnet**	—	
10	**Rod seal**	NBR	
11	**Piston seal**	NBR	
12	**Gasket**	NBR	
13	**Solenoid valve**	—	
14	**Pilot valve**	—	
15	**Boss ring**	Aluminum alloy	Hard anodized
16	**Rod end nut**	Carbon steel	Nickel plated

Replacement parts: Seal Kit

Bore size	Order no.	Contents
32	CQ2B32-PS	Set of nos. above ⑩⑪⑫
40	CQ2B40-PS	
50	CQ2B50-PS	
63	CQ2B63-PS	

∗ Seal kit includes ⑩, ⑪, ⑫. Order the seal kit, based on each bore size.
∗ Grease pack must be ordered separately as it is not included in the seal kit.
Grease part no.: GR-S-010 (10 g)

Length of plug connector lead wire

The standard length of the plug connector with a lead wire is 300 mm, but other lengths are available as follows.

How to Order Pilot Valve Assembly

V111M- □ □ □ □

Rated voltage

5	24 VDC
6	12 VDC

Electrical entry

M	M-type plug connector with lead wire (Lead wire length 300 mm)
MO	M-type plug connector without connector

Surge voltage suppressor

Nil	Without light/surge voltage suppressor
S	With surge voltage suppressor
Z	With light/surge voltage suppressor
R	With surge voltage suppressor (Non-polar type)
U	With light/surge voltage suppressor (Non-polar type)

Manual override

Nil	Non-locking push type
B	Locking slotted type

How to Order Connector Assembly

With lead wire: **SY100-30-4A-** □

Lead wire length

Nil	300 mm	**20**	2000 mm
6	600 mm	**25**	2500 mm
10	1000 mm	**30**	3000 mm
15	1500 mm	**50**	5000 mm

How to Order
Indicate the part number of the connector assembly in addition to the part number of the solenoid valve without the connector for the plug connector.
Example) Lead wire length 2000 mm

When ordering cylinder with valve
CVQB32-30-M9B-5MOZ
SY100-30-4A-20

Dimensions: ø32, ø40, ø50, ø63

Basic: CVQB

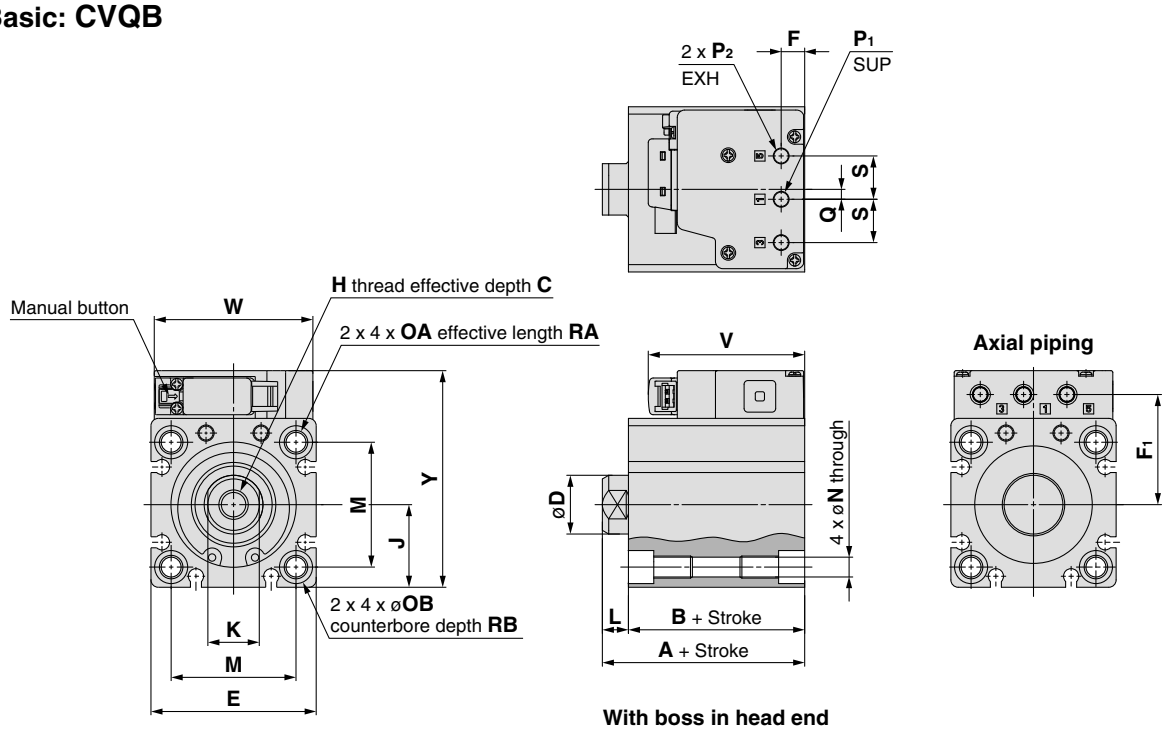

(mm)

Bore size (mm)	F_1
32	30
40	34.5
50	43.5
63	51

With boss in head end

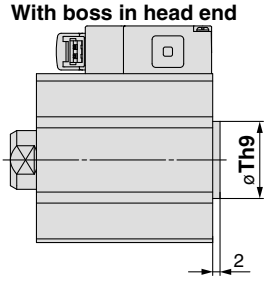

(mm)

Bore size (mm)	Th9
32	$21^{0}_{-0.052}$
40	$28^{0}_{-0.052}$
50	$35^{0}_{-0.062}$
63	$35^{0}_{-0.062}$

Rod end male thread

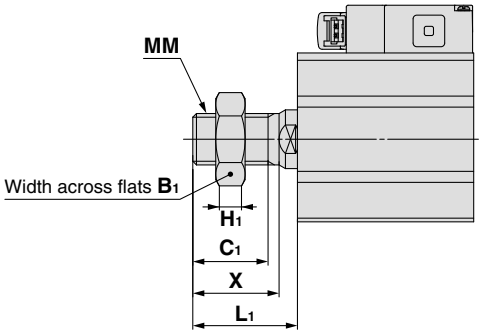

(mm)

Bore size (mm)	B_1	C_1	H_1	L_1	MM	X
32	22	20.5	8	28.5	M14 x 1.5	23.5
40	22	20.5	8	28.5	M14 x 1.5	23.5
50	27	26	11	33.5	M18 x 1.5	28.5
63	27	26	11	33.5	M18 x 1.5	28.5

(mm)

Bore size (mm)	Stroke range (mm)	A	B	C	D	E	F	H	J	K	L	M	N	OA	OB	P_1	P_2	Q
32	5 to 100	40 Note 1)	33 Note 1)	13	16	45	6.5	M8 x 1.25	22.5	14	7	34	5.4	M6 x 1	9	M5 x 0.8	M5 x 0.8	2.5
40	5 to 100	46.5	39.5	13	16	52	6.5	M8 x 1.25	26	14	7	40	5.4	M6 x 1	9	M5 x 0.8	M5 x 0.8	2.5
50	10 to 100	48.5 Note 2)	40.5 Note 2)	15	20	64	7.5	M10 x 1.5	32	17	8	50	6.6	M8 x 1.25	11	Rc, G, NPT1/8	Rc, G, NPT1/8	3.5
63	10 to 100	54	46	15	20	77	7.5	M10 x 1.5	38.5	17	8	60	9	M10 x 1.5	14	Rc, G, NPT1/8	Rc, G, NPT1/8	3.5

Bore size (mm)	Stroke range (mm)	RA	RB	S	V	W	Y
32	5 to 100	10	7	12	43	43.5	59
40	5 to 100	10	7	12	43	43.5	67
50	10 to 100	14	8	17	54	63	83
63	10 to 100	18	10.5	17	54	63	97

Note 1) The dimensions (A + stroke) and (B + stroke) for 5 mm stroke will be the same as those for 10 mm stroke.
Note 2) The dimensions (A + stroke) and (B + stroke) for 10 mm stroke will be the same as those for 15 mm stroke.

Dimensions: ø32, ø40, ø50, ø63

Foot: CVQL

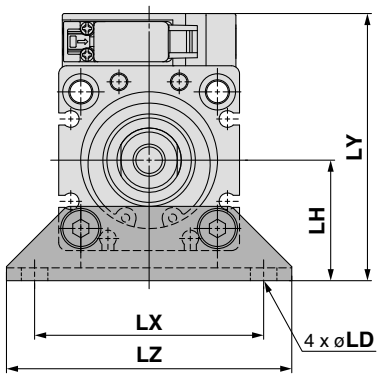

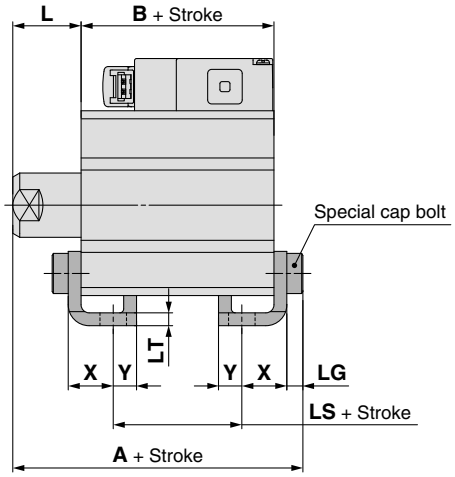

Rod end male thread

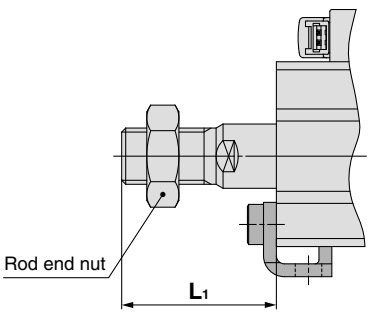

(mm)

Bore size (mm)	Stroke range (mm)	A	B	LS	L	L_1	LD	LG	LH	LT	LX	LY	LZ	X	Y
32	5 to 100	57.2 Note 1)	33 Note 2)	17 Note 1)	17	38.5	6.6	4	30	3.2	57	66.5	71	11.2	5.8
40	5 to 100	63.7	39.5	23.5	17	38.5	6.6	4	33	3.2	64	74	78	11.2	7
50	10 to 100	66.7 Note 2)	40.5 Note 2)	17.5 Note 2)	18	43.5	9	5	39	3.2	79	90	95	14.7	8
63	10 to 100	72.2	46	20	18	43.5	11	5	46	3.2	95	104.5	113	16.2	9

Foot bracket material: Carbon steel
Surface treatment: Nickel plated

Note 1) The dimensions (A + stroke), (B + stroke) and (LS + stroke) for 5 mm stroke will be the same as those for 10 mm stroke.
Note 2) The dimensions (A + stroke), (B + stroke) and (LS + stroke) for 10 mm stroke will be the same as those for 15 mm stroke.

Rod flange: CVQF

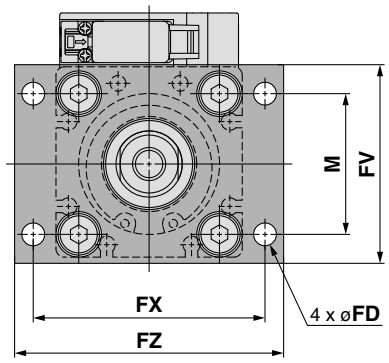

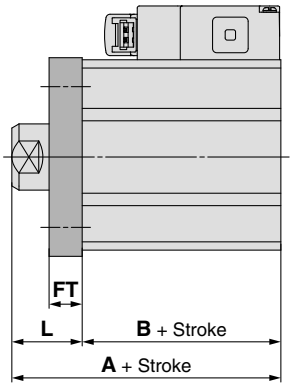

Rod end male thread

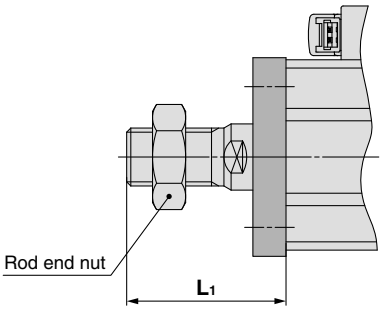

(mm)

Bore size (mm)	Stroke range (mm)	A	B	FD	FT	FV	FX	FZ	L	L_1	M
32	5 to 100	50 Note 1)	33 Note 1)	5.5	8	48	56	65	17	38.5	34
40	5 to 100	56.5	39.5	5.5	8	54	62	72	17	38.5	40
50	10 to 100	58.5 Note 2)	40.5 Note 2)	6.6	9	67	76	89	18	43.5	50
63	10 to 100	64	46	9	9	80	92	108	18	43.5	60

Flange bracket material: Carbon steel
Surface treatment: Nickel plated

Note 1) The dimensions (A + stroke) and (B + stroke) for 5 mm stroke will be the same as those for 10 mm stroke.
Note 2) The dimensions (A + stroke) and (B + stroke) for 10 mm stroke will be the same as those for 15 mm stroke.

Dimensions: ø32, ø40, ø50, ø63

Head flange: CVQG

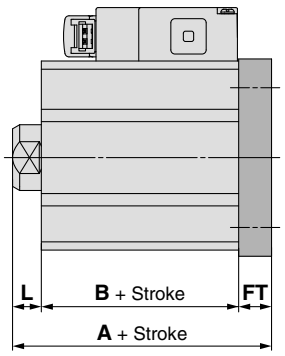

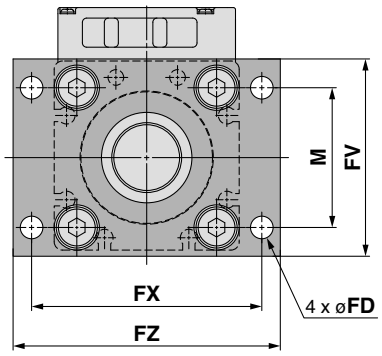

Rod end male thread

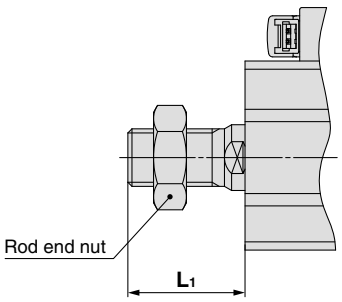

(mm)

Bore size (mm)	Stroke range (mm)	A	B	FD	FT	FV	FX	FZ	L	L_1	M
32	5 to 100	48 Note 1)	33 Note 1)	5.5	8	48	56	65	7	28.5	34
40	5 to 100	54.5	39.5	5.5	8	54	62	72	7	28.5	40
50	10 to 100	57.5 Note 2)	40.5 Note 2)	6.6	9	67	76	89	8	33.5	50
63	10 to 100	63	46	9	9	80	92	108	8	33.5	60

Flange bracket material: Carbon steel
Surface treatment: Nickel plated

Note 1) The dimensions (A + stroke) and (B + stroke) for 5 mm stroke will be the same as those for 10 mm stroke.
Note 2) The dimensions (A + stroke) and (B + stroke) for 10 mm stroke will be the same as those for 15 mm stroke.

Double clevis: CVQD

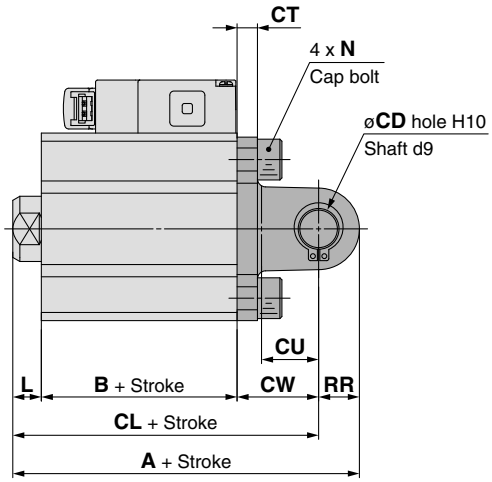

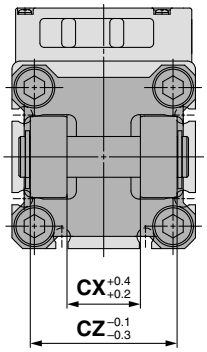

Rod end male thread

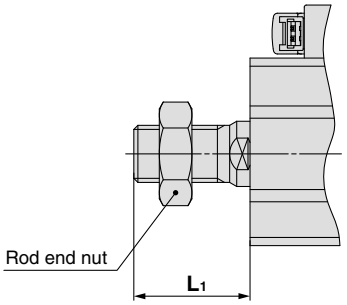

(mm)

Bore size (mm)	Stroke range (mm)	A	B	CL	CD	CT	CU	CW	CX	CZ	L	L_1	N	RR
32	5 to 100	70 Note 1)	33 Note 1)	60	10	5	14	20	18	36	7	28.5	M6 x 1	10
40	5 to 100	78.5	39.5	68.5	10	6	14	22	18	36	7	28.5	M6 x 1	10
50	10 to 100	90.5 Note 2)	40.5 Note 2)	76.5	14	7	20	28	22	44	8	33.5	M8 x 1.25	14
63	10 to 100	98	46	84	14	8	20	30	22	44	8	33.5	M10 x 1.5	14

Double clevis bracket material: Cast iron
Surface treatment: Coated

Note 1) The dimensions (A + stroke), (B + stroke) and (CL + stroke) for 5 mm stroke will be the same as those for 10 mm stroke.
Note 2) The dimensions (A + stroke), (B + stroke) and (CL + stroke) for 10 mm stroke will be the same as those for 15 mm stroke.

Accessory Bracket

Single knuckle joint

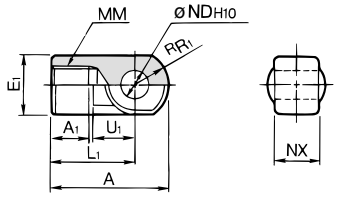

Material: Cast iron
(mm)

Part no.	Applicable bore size (mm)	A	A_1	E_1	L_1	MM	$^RR_1$	U_1	ND_{H10}	NX
I-G04	32, 40	42	14	ø22	30	M14 x 1.5	12	14	$10^{+0.058}_{0}$	$18^{-0.3}_{-0.5}$
I-G05	50, 63	56	18	ø28	40	M18 x 1.5	16	20	$14^{+0.070}_{0}$	$22^{-0.3}_{-0.5}$

Double knuckle joint

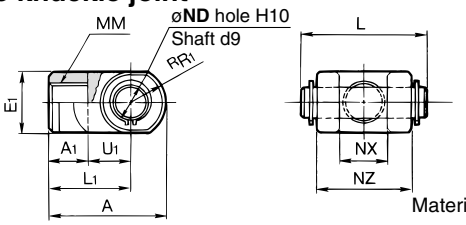

Material: Cast iron
(mm)

Part no.	Applicable bore size (mm)	A	A_1	E_1	L_1	MM	$^RR_1$	U_1	ND_{H10}	NX	NZ	L	Applicable pin part no.
Y-G04	32, 40	42	16	ø22	30	M14 x 1.5	12	14	$10^{+0.058}_{0}$	$18^{+0.5}_{+0.3}$	36	41.6	IY-G04
Y-G05	50, 63	56	20	ø28	40	M18 x 1.5	16	20	$14^{+0.070}_{0}$	$22^{+0.5}_{+0.3}$	44	50.6	IY-G05

∗ Knuckle pin and retaining ring are included.

Knuckle pin (Common with double clevis pin)

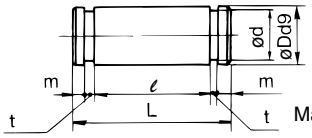

Material: Carbon steel
(mm)

Part no.	Applicable bore size (mm)	Dd9	L	d	ℓ	m	t	Retaining ring
IY-G04	32, 40	$10^{-0.040}_{-0.076}$	41.6	9.6	36.2	1.55	1.15	10 C-type for shaft
IY-G05	50, 63	$14^{-0.050}_{-0.093}$	50.6	13.4	44.2	2.05	1.15	14 C-type for shaft

Rod end nut

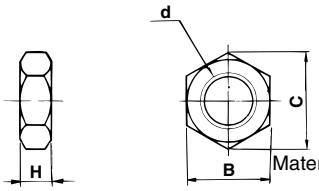

Material: Carbon steel
(mm)

Part no.	Applicable bore size (mm)	d	H	B	C
NT-04	32, 40	M14 x 1.5	8	22	25.4
NT-05	50, 63	M18 x 1.5	11	27	31.2

Simple Joint / ø32 to ø63

Joint and mounting bracket (A/B-type) part no.

YA - 03

- **Mounting bracket**
- **Applicable air cylinder bore size**

YA	A-type mounting bracket
YB	B-type mounting bracket
YU	Joint

03	For ø32, ø40
05	For ø50, ø63

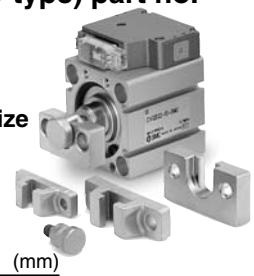

Allowable Eccentricity

(mm)

Bore size	ø32	ø40	ø50	ø63
Eccentricity tolerance	±1			
Backlash	0.5			

<Ordering>
- Joints are not included with the A- or B-type mounting brackets. Order them separately.

(Example)

Bore size for ø40	Order number
• A-type mounting bracket part number ·····	YA-03
• Joint ·····	YU-03

Joint and mounting bracket (A/B-type) part no.

Bore size (mm)	Joint part no.	Applicable mounting bracket	
		A-type mounting bracket	B-type mounting bracket
32, 40	YU-03	YA-03	YB-03
50, 63	YU-05	YA-05	YB-05

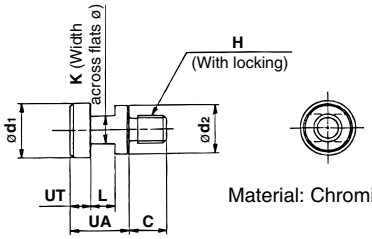

Material: Chromium molybdenum steel
(Nickel plated)
(mm)

Part no.	Applicable bore size (mm)	UA	C	d_1	d_2	H	K	L	UT	Weight (g)
YU-03	32, 40	17	11	15.8	14	M8 x 1.25	8	7	6	25
YU-05	50, 60	17	13	19.8	18	M10 x 1.5	10	7	6	40

A-type mounting bracket

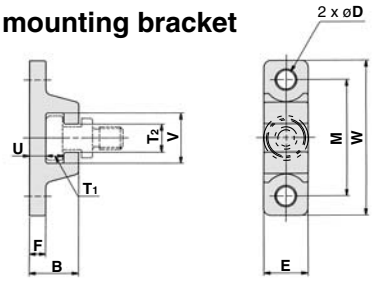

Material: Chromium
molybdenum steel
(Nickel plated)
(mm)

Part no.	Bore size (mm)	B	D	E	F	M	T_1	T_2
YA-03	32, 40	18	6.8	16	6	42	6.5	10
YA-05	50, 63	20	9	20	8	50	6.5	12

Part no.	Bore size (mm)	U	V	W	Weight (g)
YA-03	32, 40	6	18	56	55
YA-05	50, 63	8	22	67	100

B-type mounting bracket

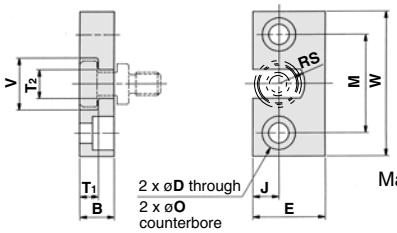

Material: Carbon steel
(Nickel plated)
(mm)

Part no.	Bore size (mm)	B	D	E	J	M	øO
YB-03	32, 40	12	7	25	9	34	11.5 depth 7.5
YB-05	50, 63	12	9	32	11	42	14.5 depth 8.5

Part no.	Bore size (mm)	T_1	T_2	V	W	RS	Weight (g)
YB-03	32, 40	6.5	10	18	50	9	80
YB-05	50, 63	6.5	12	22	60	11	120

Auto Switch Proper Mounting Position (Detection at Stroke End) and Its Mounting Height

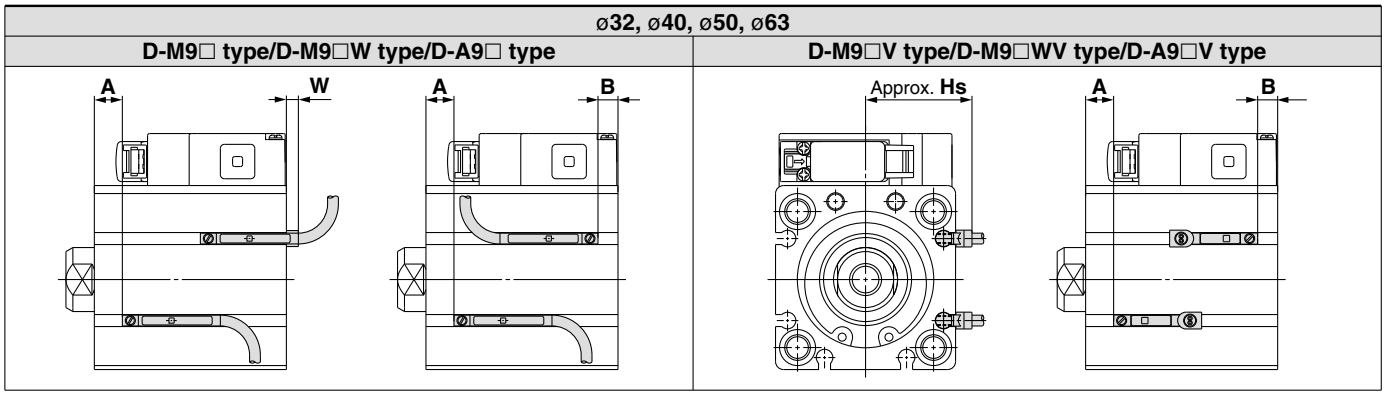

(mm)

Bore size (mm)	D-M9□ D-M9□W			D-M9□V D-M9□WV			D-A9□			D-A9□V		
	A	B	W	A	B	Hs	A	B	W	A	B	Hs
32	12 [17]	9	1	12 [17]	9	29	8 [13]	5	–3 (–0.5)	8 [13]	5	27
40	16	11.5	–1.5	16	11.5	32.5	12	7.5	–5.5 (–3)	12	7.5	30.5
50	14 <19>	14.5	–4.5	14 <19>	14.5	38.5	10 <15>	10.5	–8.5 (–6)	10 <15>	10.5	36.5
63	16.5	17.5	–7.5	16.5	17.5	42	12.5	13.5	–11.5 (–9)	12.5	13.5	40

The value in parentheses [ ] is for 5 mm stroke with ø32.
The value in parentheses < > is for 10 mm stroke with ø50.
( ): Denotes the values for D-A93.
∗ The negative indication in the table for W shows the mounting inside the cylinder body.
∗ For the actual setting, check the operating condition of the auto switch and adjust.

Auto Switch Mountable Surface, Mounting Groove Number (Direct Mounting)

The below table shows which surfaces of the cylinder an auto switch can be mounted on, and the number of slots for the direct mounting type auto switch.

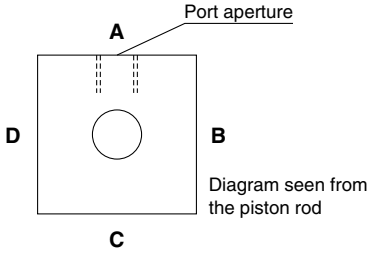

Switch model	D-M9□(V), M9□W(V), A9□(V)			
Bore size (mm)	A (Mounting groove number)	B (Mounting groove number)	C (Mounting groove number)	D (Mounting groove number)
32	—	○ (2)	○ (2)	○ (2)
40	—	○ (2)	○ (2)	○ (2)
50	—	○ (2)	○ (2)	○ (2)
63	—	○ (2)	○ (2)	○ (2)

Operating Range

(mm)

Auto switch model	Bore size			
	32	40	50	63
D-M9□, D-M9□V D-M9□W, D-M9□WV	6	6	7	7.5
D-A9□, D-A9□V	9.5	9.5	9.5	11.5

∗ Since this is a guideline including hysteresis, not meant to be guaranteed. (Assuming approximately ±30% dispersion.)
There may be the case it will vary substantially depending on an ambient environment.

Auto Switch Mounting

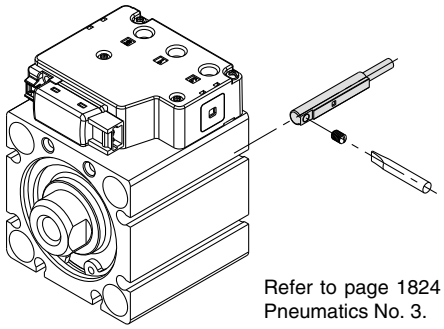

Refer to page 1824 of Best Pneumatics No. 3.

Minimum Stroke for Auto Switch Mounting

(mm)

Bore size (mm)	No. of auto switch mounted	D-M9□	D-M9□V	D-M9□W	D-M9□WV	D-A9□	D-A9□V
32∗1, 40 50∗2, 63	With 1 pc.	10	5	15	10	10	5
	With 2 pcs.	10	5	15	15	10	10

∗1 The outline dimensions for 5 mm stroke will be the same as those for 10 mm stroke.
∗2 The outline dimensions for 10 mm stroke will be the same as those for 15 mm stroke.

Prior to Use
Auto Switches Common Specifications 1

⚠Specific Product Precautions

Refer to Auto Switch Common Precautions in "Handling Precautions for SMC Products" (M-E03-3) before using auto switches.

Auto Switches Common Specifications

Type	Reed auto switch	Solid state auto switch
Leakage current	None	3-wire: 100 μA or less, 2-wire: 0.8 mA or less
Operating time	1.2 ms	1 ms or less
Impact resistance	300 m/s^2	1000 m/s^2
Insulation resistance	50 MΩ or more at 500 VDC Mega (Between lead wire and case)	
Withstand voltage	1500 VAC for 1 minute (Between lead wire and case)	1000 VAC for 1 minute (Between lead wire and case)
Ambient temperature	–10 to 60°C	
Enclosure	IEC60529 Standard IP67	

Lead Wire

Lead wire length indication (Example)

D-M9BW L

Lead wire length

Nil	0.5 m
M	1 m
L	3 m
Z	5 m

Note 1) Lead wire length Z: 5 m
Applicable auto switches
Solid state auto switch: Manufactured upon receipt of order as standard.
Note 2) Lead wire length tolerance

Lead wire length	Tolerance
0.5 m	±15 mm
1 m	±30 mm
3 m	±90 mm
5 m	±150 mm

Prior to Use
Auto Switches Common Specifications 2

⚠Specific Product Precautions

Refer to Auto Switch Common Precautions in "Handling Precautions for SMC Products" (M-E03-3) before using auto switches.

Auto Switch Hysteresis

Hysteresis is the distance between the position at which piston movement operates an auto switch to the position at which reverse movement turns the switch off. This hysteresis is included in part of the operating range (one side).

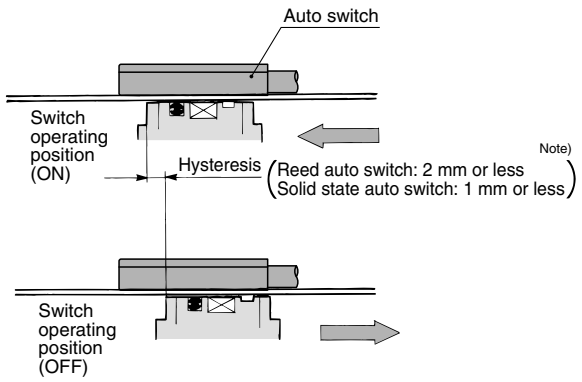

Note) Hysteresis may fluctuate due to the operating environment.
Please contact SMC if hysteresis causes an operational problem.

Contact Protection Box: CD-P11, CD-P12

<Applicable switch models>

D-A9/A9□V type

The auto switches above do not have a built-in contact protection circuit. A contact protection box is not required for solid state auto switches due to their construction.

① **Where the operation load is an inductive load.**
② **Where the wiring length to load is greater than 5 m.**
③ **Where the load voltage is 100 VAC.**
Therefore, use a contact protection box with the switch for any of the above cases:
The contact life may be shortened (due to permanent energizing conditions.)
Where the load voltage is 110 VAC
When the load voltage is increased by more than 10% to the rating of applicable auto switches above, use a contact protection box (CD-P11) to reduce the upper limit of the load current by 10% so that it can be set within the range of the load current range, 110 VAC.

Contact Protection Box Specifications

Part no.	CD-P11		CD-P12
Load voltage	100 VAC or less	200 VAC	24 VDC
Max. load current	25 mA	12.5 mA	50 mA

∗ Lead wire length — Auto switch connection side 0.5 m
Load connection side 0.5 m

Contact Protection Box Internal Circuit

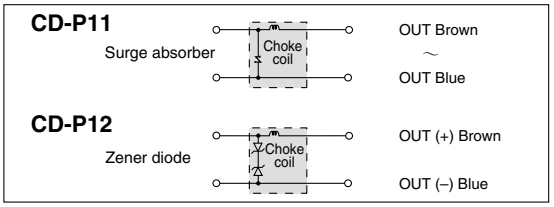

Contact Protection Box/Dimensions

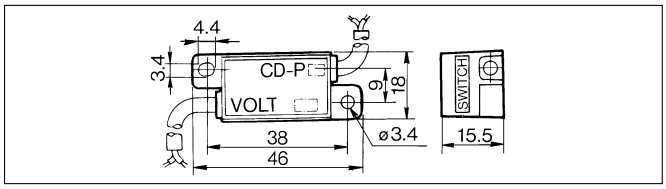

Contact Protection Box Connection

To connect a switch unit to a contact protection box, connect the lead wire from the side of the contact protection box marked SWITCH to the lead wire coming out of the switch unit. Keep the switch as close as possible to the contact protection box, with a lead wire length of no more than 1 meter.

Prior to Use
Auto Switches Connection and Example

Basic Wiring

Solid state 3-wire, NPN

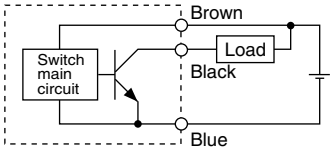

Solid state 3-wire, PNP

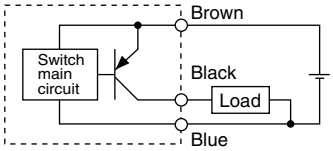

2-wire (Solid state)

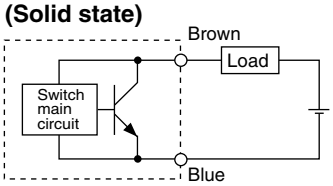

2-wire (Reed)

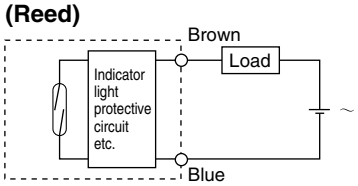

(Power supplies for switch and load are separate.)

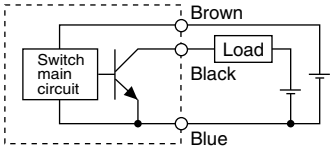

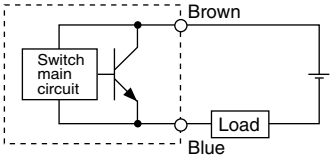

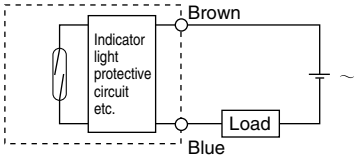

Example of Connection to PLC (Programmable Logic Controller)

- **Sink input specification**
  3-wire, NPN

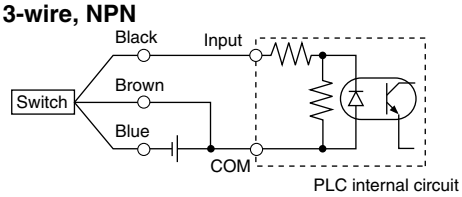

2-wire

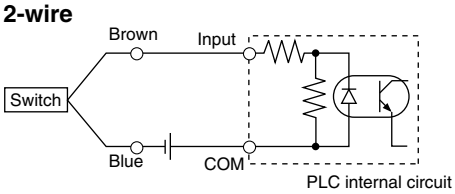

- **Source input specification**
  3-wire, PNP

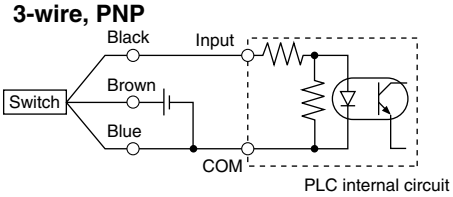

2-wire

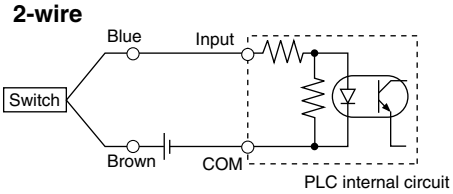

Connect according to the applicable PLC input specifications, since the connection method will vary depending on the PLC input specifications.

Example of AND (Serial) and OR (Parallel) Connection

- **3-wire**

AND connection for NPN output (using relays)

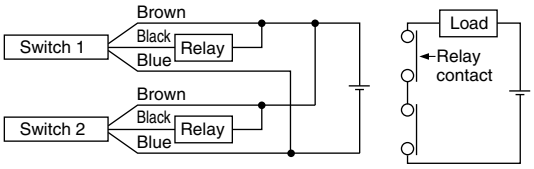

AND connection for NPN output (performed with switches only)

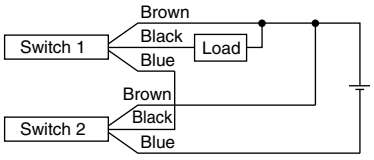

The indicator lights will illuminate when both switches are turned ON.

OR connection for NPN output

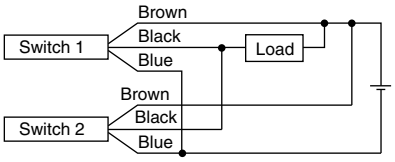

- **2-wire**

2-wire with 2-switch AND connection

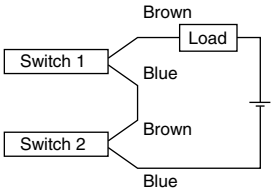

When two switches are connected in series, a load may malfunction because the load voltage will decrease when in the ON state.
The indicator lights will illuminate if both of the switches are in the ON state.

Load voltage at ON = Power supply voltage − Residual voltage x 2 pcs.
= 24 V - 4 V x 2 pcs.
= 16 V

Example: Power supply is 24 VDC.
Internal voltage drop in switch is 4 V.

2-wire with 2-switch OR connection

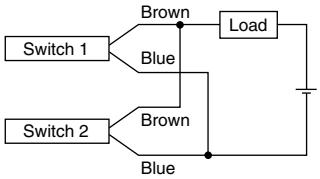

(Solid state)
When two switches are connected in parallel, a malfunction may occur because the load voltage will increase when in the OFF state.

(Reed)
Because there is no current leakage, the load voltage will not increase when turned OFF. However, depending on the number of switches in the ON state, the indicator lights may sometimes dim or not light because of the dispersion and reduction of the current flowing to the switches.

Load voltage at OFF = Leakage current x 2 pcs.
x Load impedance
= 1 mA x 2 pcs. x 3 kΩ
= 6 V

Example: Load impedance is 3 kΩ.
Leakage current from switch is 1 mA.

Solid State Auto Switch: Direct Mounting Style
D-M9N(V)/D-M9P(V)/D-M9B(V)

Grommet

- **2-wire load current is reduced (2.5 to 40 mA).**
- **Flexibility is 1.5 times greater than the conventional model (SMC comparison).**
- **Using flexible cable as standard spec.**

⚠Caution

Operating Precautions

Fix the switch with the existing screw installed on the switch body. The switch may be damaged if a screw other than the one supplied is used.

Auto Switch Internal Circuit

D-M9N, M9NV

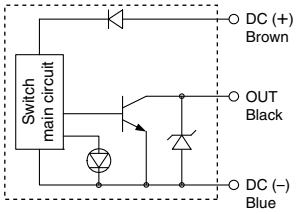

D-M9P, M9PV

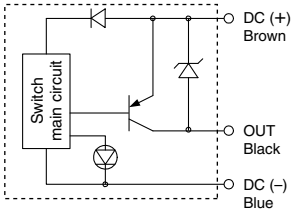

D-M9B, M9BV

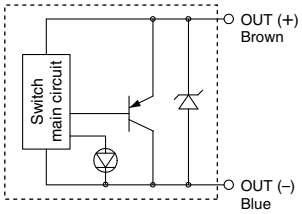

Auto Switch Specifications

Refer to SMC website for the details of the products conforming to the international standards.

PLC: Programmable Logic Controller

D-M9□/D-M9□V (With indicator light)						
Auto switch part no.	D-M9N	D-M9NV	D-M9P	D-M9PV	D-M9B	D-M9BV
Electrical entry direction	In-line	Perpendicular	In-line	Perpendicular	In-line	Perpendicular
Wiring type	3-wire				2-wire	
Output type	NPN		PNP		—	
Applicable load	IC circuit, Relay, PLC				24 VDC relay, PLC	
Power supply voltage	5, 12, 24 VDC (4.5 to 28 V)				—	
Current consumption	10 mA or less				—	
Load voltage	28 VDC or less		—		24 VDC (10 to 28 VDC)	
Load current	40 mA or less				2.5 to 40 mA	
Internal voltage drop	0.8 V or less at 10 mA (2 V or less at 40 mA)				4 V or less	
Leakage current	100 μA or less at 24 VDC				0.8 mA or less	
Indicator light	Red LED illuminates when turned ON.					
Standard	CE marking					

- Lead wires — Oilproof heavy-duty vinyl cable: ø2.7 x 3.2 ellipse
  D-M9B(V) 0.15 mm² x 2 cores
  D-M9N(V), D-M9P(V) 0.15 mm² x 3 cores

Note 1) Refer to page 11 for solid state switch common specifications.
Note 2) Refer to page 11 for lead wire lengths.

Weights

Unit: g

Auto switch part no.		D-M9N(V)	D-M9P(V)	D-M9B(V)
Lead wire length (m)	0.5	8	8	7
	1	14	14	13
	3	41	41	38
	5	68	68	63

Dimensions

Unit: mm

D-M9□

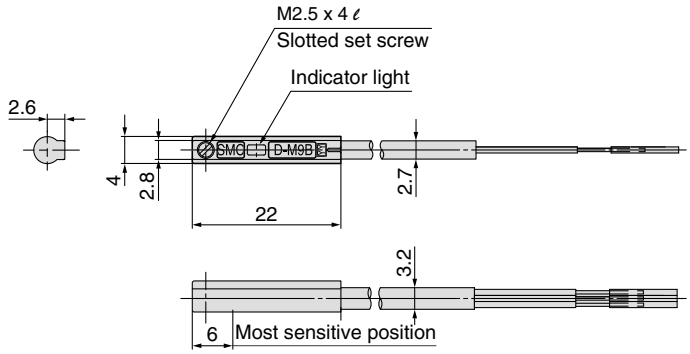

D-M9□V

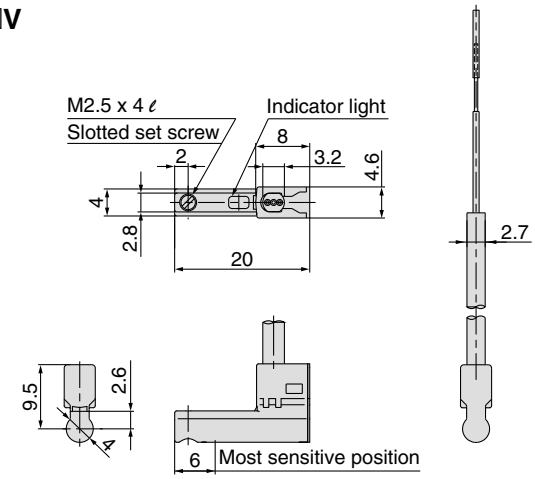

2-Color Indication Solid State Auto Switch: Direct Mounting Style
D-M9NW(V)/D-M9PW(V)/D-M9BW(V)

Grommet

- **2-wire load current is reduced (2.5 to 40 mA).**
- **Flexibility is 1.5 times greater than the conventional model (SMC comparison).**
- **Using flexible cable as standard spec.**
- **The optimum operating position can be determined by the color of the light. (Red → Green → Red)**

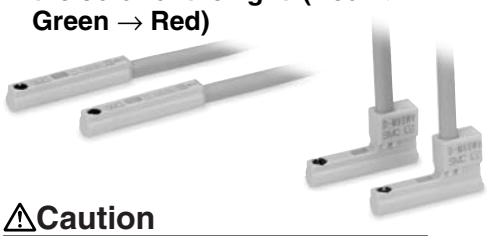

⚠Caution

Operating Precautions

Fix the switch with the existing screw installed on the switch body. The switch may be damaged if a screw other than the one supplied is used.

Auto Switch Internal Circuit

D-M9NW, M9NWV

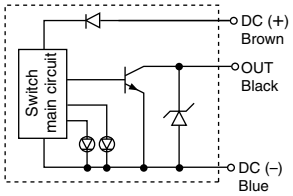

D-M9PW, M9PWV

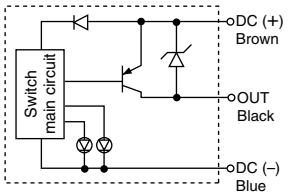

D-M9BW, M9BWV

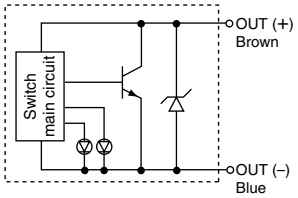

Indicator light / Display method

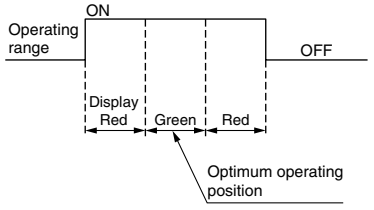

Auto Switch Specifications

Refer to SMC website for the details of the products conforming to the international standards.

PLC: Programmable Logic Controller

D-M9□W/D-M9□WV (With indicator light)						
Auto switch part no.	D-M9NW	D-M9NWV	D-M9PW	D-M9PWV	D-M9BW	D-M9BWV
Electrical entry direction	In-line	Perpendicular	In-line	Perpendicular	In-line	Perpendicular
Wiring type	3-wire				2-wire	
Output type	NPN		PNP		—	
Applicable load	IC circuit, Relay, PLC				24 VDC relay, PLC	
Power supply voltage	5, 12, 24 VDC (4.5 to 28 V)				—	
Current consumption	10 mA or less				—	
Load voltage	28 VDC or less		—		24 VDC (10 to 28 VDC)	
Load current	40 mA or less				2.5 to 40 mA	
Internal voltage drop	0.8 V or less at 10 mA (2 V or less at 40 mA)				4 V or less	
Leakage current	100 μA or less at 24 VDC				0.8 mA or less	
Indicator light	Operating position ····· Red LED illuminates. Optimum operating position ····· Green LED illuminates.					
Standard	CE marking					

- Lead wires — Oilproof heavy-duty vinyl cable: ø2.7 x 3.2 ellipse
  D-M9BW(V) 0.15 mm² x 2 cores
  D-M9NW(V), D-M9PW(V) 0.15 mm² x 3 cores

Note 1) Refer to page 11 for solid state switch common specifications.
Note 2) Refer to page 11 for lead wire lengths.

Weights

Unit: g

Auto switch part no.		D-M9NW(V)	D-M9PW(V)	D-M9BW(V)
Lead wire length (m)	0.5	8	8	7
	1	14	14	13
	3	41	41	38
	5	68	68	63

Dimensions

Unit: mm

D-M9□W

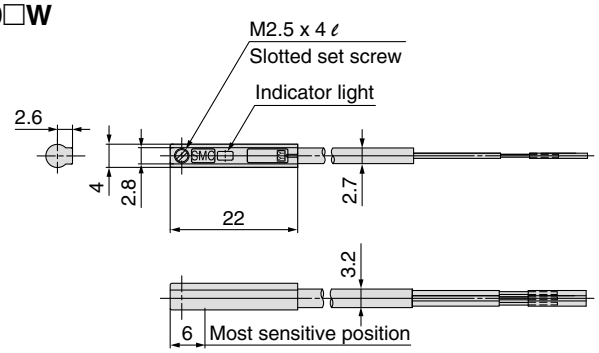

D-M9□WV

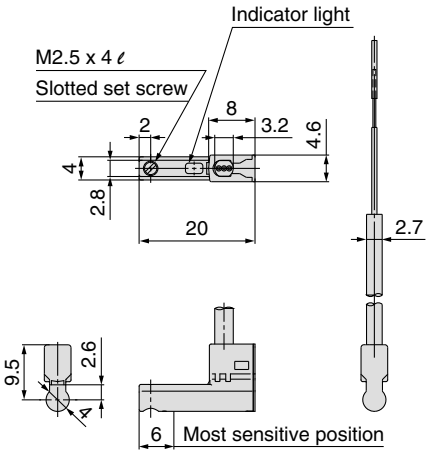

Reed Auto Switch: Direct Mounting Style
D-A90(V)/D-A93(V)/D-A96(V) CE

Grommet

⚠Caution

Operating Precautions

Fix the switch with the existing screw installed on the switch body. The switch may be damaged if a screw other than the one supplied is used.

Auto Switch Internal Circuit

D-A90, A90V

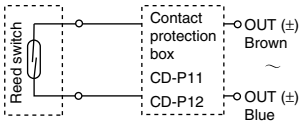

D-A93, A93V

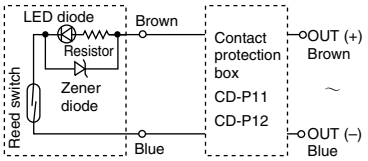

D-A96, A96V

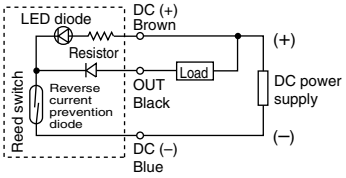

Note 1) Operating load is an induction load.
Note 2) Wiring to the load is 5 m or longer.
Note 3) Load voltage is 100 VAC.

Use the contact protection box in any of the above listed situations.
The contact point life may decrease.
(Refer to page 12 for contact protection box.)

Auto Switch Specifications

Refer to SMC website for the details of the products conforming to the international standards.

PLC: Programmable Logic Controller

D-A90/D-A90V (Without indicator light)			
Auto switch part no.	D-A90/D-A90V		
Applicable load	IC circuit, Relay, PLC		
Load voltage	24 VAC/DC or less	48 VAC/DC or less	100 VAC/DC or less
Maximum load current	50 mA	40 mA	20 mA
Contact protection circuit	None		
Internal resistance	1 Ω or less (including lead wire length of 3 m)		
Standard	CE marking		
D-A93/D-A93V/D-A96/D-A96V (With indicator light)			
Auto switch part no.	D-A93/D-A93V		D-A96/D-A96V
Applicable load	Relay, PLC		IC circuit
Load voltage	24 VDC	100 VAC	4 to 8 VDC
Load current range and max. load current Note 3)	5 to 40 mA	5 to 20 mA	20 mA
Contact protection circuit	None		
Internal voltage drop	D-A93 — 2.4 V or less (to 20 mA)/3 V or less (to 40 mA) D-A93V — 2.7 V or less		0.8 V or less
Indicator light	Red LED illuminates when turned ON.		
Standard	CE marking		

- Lead wires
  D-A90(V)/D-A93(V) — Oilproof heavy-duty vinyl cable: ø2.7, 0.18 mm² x 2 cores (Brown, Blue), 0.5 m
  D-A96(V) — Oilproof heavy-duty vinyl cable: ø2.7, 0.15 mm² x 3 cores (Brown, Black, Blue), 0.5 m

Note 1) Refer to page 11 for reed switch common specifications.
Note 2) Refer to page 11 for lead wire lengths.
Note 3) Under 5 mA, the strength of the indicator light is poor. In some cases, visibility of the indicator light will not be possible where the output signal is less than 2.5 mA. However, there is no problem in terms of contact output, when an output signal exceeds 1 mA or more.

Weights

Unit: g

Auto switch part no.		D-A90	D-A90V	D-A93	D-A93V	D-A96	D-A96V
Lead wire length (m)	0.5	6	6	6	6	8	8
	3	30	30	30	30	41	41

Dimensions

Unit: mm

D-A90/D-A93/D-A96

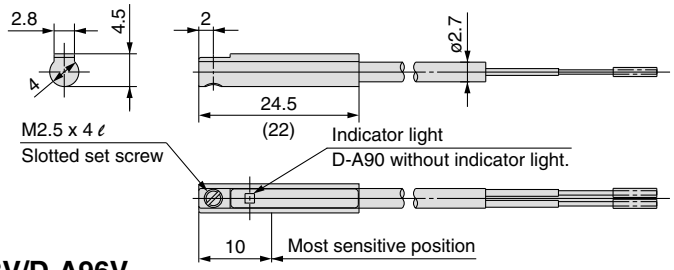

D-A90V/D-A93V/D-A96V

( ): Dimensions for D-A96

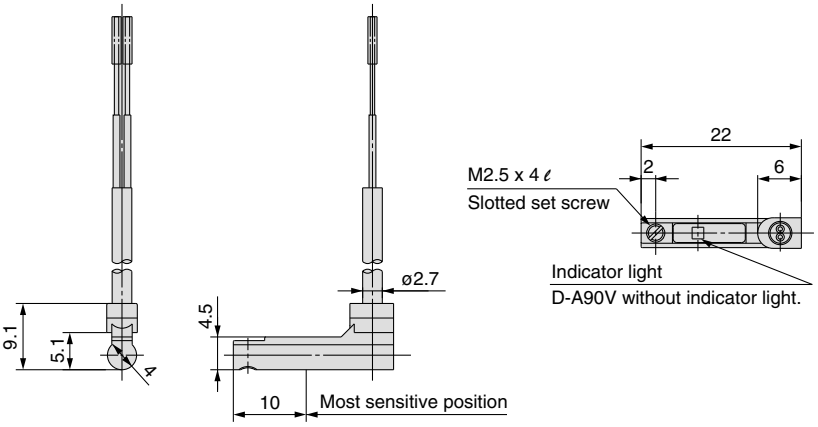

Safety Instructions

These safety instructions are intended to prevent hazardous situations and/or equipment damage. These instructions indicate the level of potential hazard with the labels of **"Caution," "Warning"** or **"Danger."** They are all important notes for safety and must be followed in addition to International Standards (ISO/IEC)*1), and other safety regulations.

*1) ISO 4414: Pneumatic fluid power – General rules relating to systems.
ISO 4413: Hydraulic fluid power – General rules relating to systems.
IEC 60204-1: Safety of machinery – Electrical equipment of machines. (Part 1: General requirements)
ISO 10218-1: Manipulating industrial robots - Safety.
etc.

⚠ **Caution:**	**Caution** indicates a hazard with a low level of risk which, if not avoided, could result in minor or moderate injury.
⚠ **Warning:**	**Warning** indicates a hazard with a medium level of risk which, if not avoided, could result in death or serious injury.
⚠ **Danger :**	**Danger** indicates a hazard with a high level of risk which, if not avoided, will result in death or serious injury.

⚠ Warning

1. **The compatibility of the product is the responsibility of the person who designs the equipment or decides its specifications.**
   Since the product specified here is used under various operating conditions, its compatibility with specific equipment must be decided by the person who designs the equipment or decides its specifications based on necessary analysis and test results. The expected performance and safety assurance of the equipment will be the responsibility of the person who has determined its compatibility with the product. This person should also continuously review all specifications of the product referring to its latest catalog information, with a view to giving due consideration to any possibility of equipment failure when configuring the equipment.
2. **Only personnel with appropriate training should operate machinery and equipment.**
   The product specified here may become unsafe if handled incorrectly. The assembly, operation and maintenance of machines or equipment including our products must be performed by an operator who is appropriately trained and experienced.
3. **Do not service or attempt to remove product and machinery/equipment until safety is confirmed.**
   1. The inspection and maintenance of machinery/equipment should only be performed after measures to prevent falling or runaway of the driven objects have been confirmed.
   2. When the product is to be removed, confirm that the safety measures as mentioned above are implemented and the power from any appropriate source is cut, and read and understand the specific product precautions of all relevant products carefully.
   3. Before machinery/equipment is restarted, take measures to prevent unexpected operation and malfunction.
4. **Contact SMC beforehand and take special consideration of safety measures if the product is to be used in any of the following conditions.**
   1. Conditions and environments outside of the given specifications, or use outdoors or in a place exposed to direct sunlight.
   2. Installation on equipment in conjunction with atomic energy, railways, air navigation, space, shipping, vehicles, military, medical treatment, combustion and recreation, or equipment in contact with food and beverages, emergency stop circuits, clutch and brake circuits in press applications, safety equipment or other applications unsuitable for the standard specifications described in the product catalog.
   3. An application which could have negative effects on people, property, or animals requiring special safety analysis.
   4. Use in an interlock circuit, which requires the provision of double interlock for possible failure by using a mechanical protective function, and periodical checks to confirm proper operation.

Safety Instructions

⚠Caution

1. The product is provided for use in manufacturing industries.
The product herein described is basically provided for peaceful use in manufacturing industries.
If considering using the product in other industries, consult SMC beforehand and exchange specifications or a contract if necessary.
If anything is unclear, contact your nearest sales branch.

Limited warranty and Disclaimer/Compliance Requirements

The product used is subject to the following “Limited warranty and Disclaimer” and “Compliance Requirements”. Read and accept them before using the product.

Limited warranty and Disclaimer

1. The warranty period of the product is 1 year in service or 1.5 years after the product is delivered.*2)
   Also, the product may have specified durability, running distance or replacement parts. Please consult your nearest sales branch.
2. For any failure or damage reported within the warranty period which is clearly our responsibility, a replacement product or necessary parts will be provided.
   This limited warranty applies only to our product independently, and not to any other damage incurred due to the failure of the product.
3. Prior to using SMC products, please read and understand the warranty terms and disclaimers noted in the specified catalog for the particular products.

***2) Vacuum pads are excluded from this 1 year warranty.**
A vacuum pad is a consumable part, so it is warranted for a year after it is delivered.
Also, even within the warranty period, the wear of a product due to the use of the vacuum pad or failure due to the deterioration of rubber material are not covered by the limited warranty.

Compliance Requirements

1. The use of SMC products with production equipment for the manufacture of weapons of mass destruction (WMD) or any other weapon is strictly prohibited.
2. The exports of SMC products or technology from one country to another are governed by the relevant security laws and regulations of the countries involved in the transaction. Prior to the shipment of a SMC product to another country, assure that all local rules governing that export are known and followed.

Series CVQ
Specific Product Precautions 1

Be sure to read before handling. Refer to back pages 1 and 2 for Safety Instructions, "Handling Precautions for SMC Products" (M-E03-3) for Actuators, Auto Switches and 3/4/5 Port Solenoid Valves Precautions.

Manual Override

⚠ Warning

Connected actuator is started by manual operation. Use the manual override after confirming that there is no danger.

■ **Non-locking push type**
[Standard]
Press in the direction of the arrow

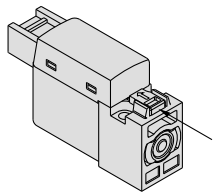

■ **Locking slotted type**
[B type]
Turn 90° in the direction of arrow.

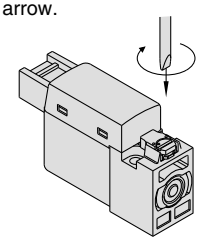

⚠ Caution
When operating with a screwdriver, turn it gently using a watchmaker's screwdriver. (Torque: Less than 0.1 N•m)

How to Use Plug Connector

⚠ Caution

1. Attaching and detaching connectors

- To attach a connector, hold the lever and connector unit between your fingers and insert straight onto the pins of the solenoid valve and remove the pawl from the groove by pushing the lever downward with your thumb, and pull the connector straight out.
- To detach a connector, remove the pawl from the groove by pushing the lever downward with your thumb, and pull the connector straight out.

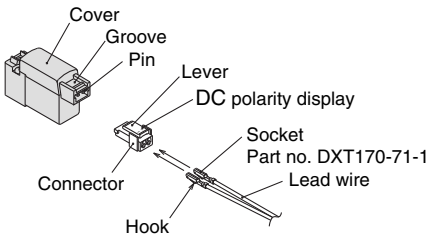

2. Crimping of lead wires and sockets

Not necessary if ordering the lead wire pre-connected model. Strip 3.2 to 3.7 mm at the end of the lead wires, insert the ends of the core wires evenly into the sockets, and then crimp with a crimping tool. When this is done, take care that the coverings of the lead wires do not enter the core wire crimping area.
For crimping, use a specific tool. (For special crimping tool, please contact SMC.)

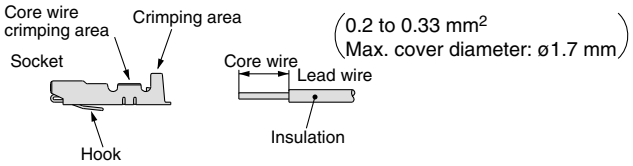

How to Use Plug Connector

⚠ Caution

2. Attaching and detaching sockets with lead wires

• Attaching
Insert the sockets into the square holes of the connector (⊕, ⊖ indication), and continue to push the sockets all the way in until they lock by hooking into the seats in the connector. (When they are pushed in, their hooks open and they are locked automatically.) Then confirm that they are locked by pulling lightly on the lead wires.

• Detaching
To detach a socket from a connector, pull out the lead wire while pressing the socket's hook with a stick having a thin tip (approx. 1 mm). If the socket will be used again, first spread the hook outward.

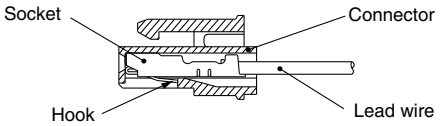

4. Do not apply bending force or tensile force repeatedly to the lead wire.

This can cause disconnection of the connector and breakage of the lead wire. If this is unavoidable due to the application, keep the bending radius of the lead wire R8 mm at least.

Surge Voltage Suppressor

⚠ Caution

■ **Standard (with polarity)**
With surge voltage suppressor (□S)

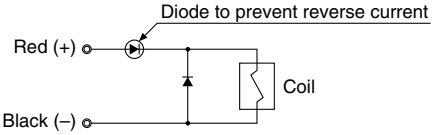

With light/surge voltage suppressor (□Z)

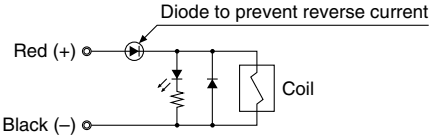

■ **Non-polar type**
With surge voltage suppressor (□R)

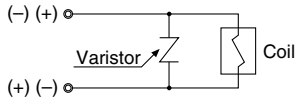

With light/surge voltage suppressor (□U)

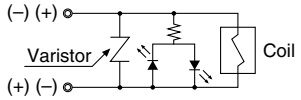

- For standard type, connect so that polarity is matched to the connector's (+), (–). (For non-polar type, the lead wires can be connected to either one.)
- Solenoids, whose lead wires have been pre-wired: positive side red and negative side black.

Specific Product Precautions 2

Be sure to read before handling. Refer to back pages 1 and 2 for Safety Instructions, "Handling Precautions for SMC Products" (M-E03-3) for Actuators, Auto Switches and 3/4/5 Port Solenoid Valves Precautions.

Retaining Ring Installation/Removal

⚠ Caution

1. To remove and install the retaining ring, use an appropriate pair of pliers (tool for installing C-type retaining ring).
2. Even if a proper plier (tool for installing C-type retaining ring) is used, it is likely to inflict damage to a human body or peripheral equipment, as a retaining ring may be flown out of the tip of a plier (tool for installing C-type retaining ring). Be much careful with the popping of a retaining ring. Besides, be certain that a retaining ring is placed firmly into the groove of rod cover before supplying air at the time of installment.

Other

⚠ Caution

1. Do not separate the cylinder from the valve.

Mounting/Removal

⚠ Caution

1. Do not remove the plug from the cylinder tube end surface.
   If the plug is removed with compressed air supplied to the cylinder, the air blowing out may inflict damage to a human body or peripheral equipment.

Record of changes	
Edition B	∗ Addition of bore sizes ø50 and ø63.
	NS

⚠ Safety Instructions	Be sure to read “Handling Precautions for SMC Products” (M-E03-3) before using.

SMC Corporation

Akihabara UDX 15F,
4-14-1, Sotokanda, Chiyoda-ku, Tokyo 101-0021, JAPAN
Phone: 03-5207-8249 Fax: 03-5298-5362
URL http://www.smcworld.com

D-SZ 1st printing LQ printing NS 12200SZ Printed in Japan.

This catalog is printed on recycled paper with concern for the global environment.