CAT. N-A234-D

SMC®

SMC Pneumatics, Inc.

Air Pilot Operated Series NVSA

31○5, 4○14/4○2/3/44

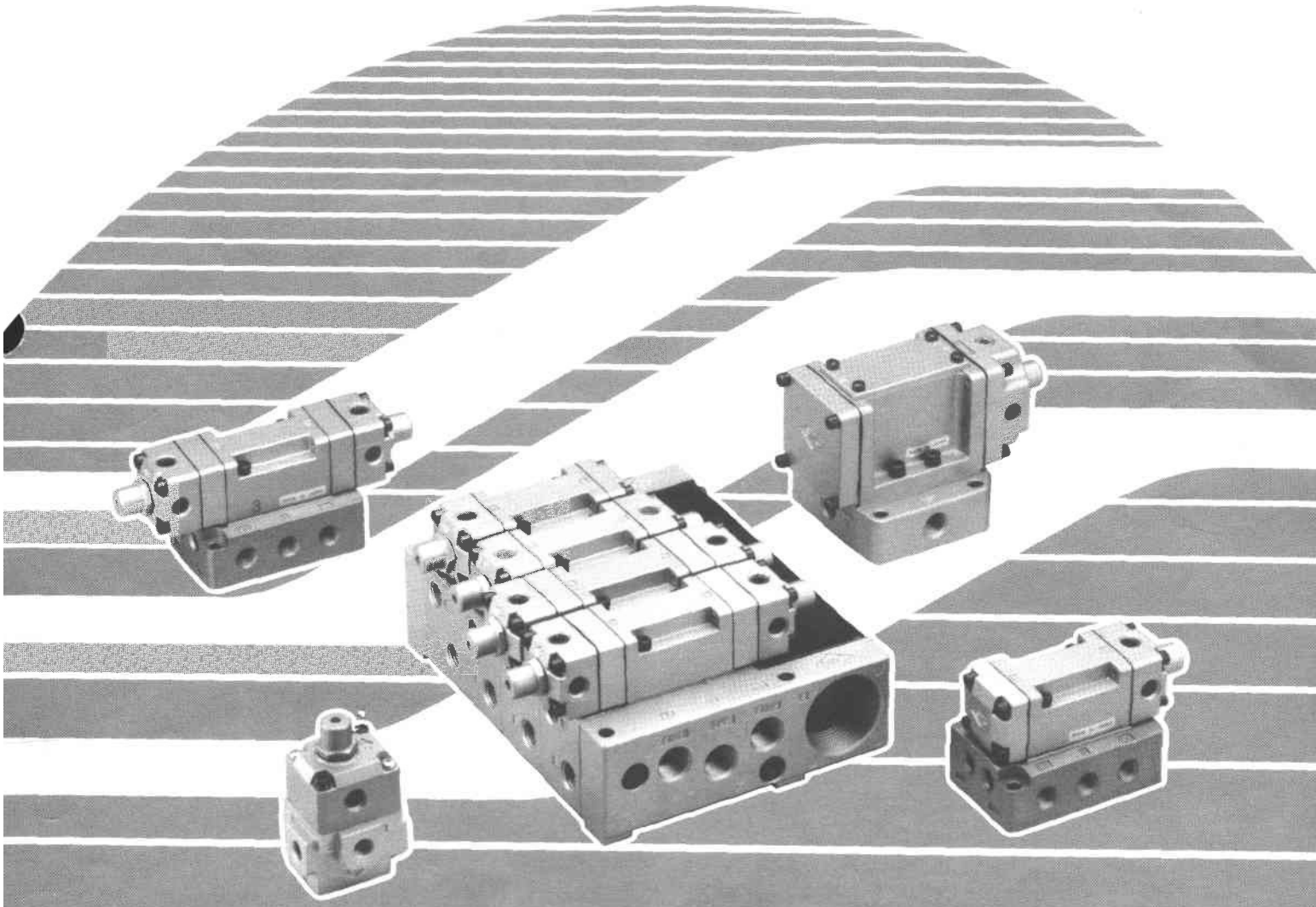

Contents	Page

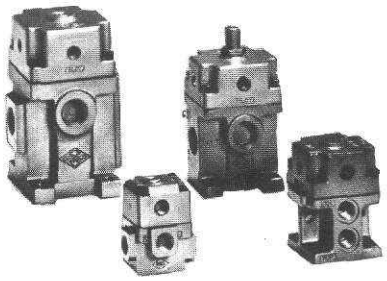

DESIGN

This design concept consists of a Match-Ground "SPOOL & SLEEVE" assembly which controls the main valving functions. This match-ground fit creates an "Air Bearing" effect for extended and efficient operation and eliminates the need *for resilient seals.* Large capacity air flows are achieved by application of the SMC U.S. Patents applicable to this type of valve. Should the valve require disassembly for maintenance the Spool and Sleeve should be retained as a unit.

GENERAL:

These valves are compact, heavy duty matched ground spool and sleeve air valves intended for general industrial service.

HOW THE VALVE WORKS:

The spring holds the spool fully up. When pilot pressure is introduced into the "A" pilot chamber, this pressure acts on the end of the spool, and forces it down. When this pressure becomes high enough, it forces the spool down and compresses the spring. When the pilot chamber is exhausted, the pressure against the spool decays, and the spring returns the spool to the up position.

PILOT IDENTIFICATION:

The official standard for diagramming air logic is National Fluid Power Association Recommended Standard T3.28.9-1973 "Method of Diagramming for Moving Part Fluid Controls." The entire standard is built around the identification of the spring end of the valve as the "B" end and the end opposite the spring as the "A" end. The valve body carries this identification and conforms with the NFPA standard.

PILOT PRESSURE CHARACTERISTICS:

The spool has no seals, and is balanced to air pressures. Thus the pressure in the valve has no effect on the pilot pressure required to shift the spool. The pilot pressure required is always constant, regardless of the pressure in the main passages.

This feature makes the valve an ideal companion for air logic systems, assuring constant response from cycle to cycle. No other type of valve action provides this constant response.

The standard output pressure for moving part air logic is 50 PSIG (3.44 Bar). The 25 PSIG pilot pressure required to shift this valve gives approximately the same response to shift and to return when the pilot pressure applied is 50 PSIG (3.44 Bar). The minimum volume of the pilot chamber and the small swept volume displaced by the short-stroke spool also aid in fast response.

MULTI-PURPOSE FLOW PATTERN:

True multi-purpose valve. Any port may be pressurized, back-pressured, or plugged without affecting the operation of the spool. May be used without modification as a normally open or normally closed 3-way or 2-way, simply by piping and plugging the appropriate ports. May also be piped as a selector or a diverter.

MOUNTING:

Intended for foot mounting or is light enough to hang in a pipe line. Pipe taps are directly in the body. Valve may be mounted in any position.

PECIFICATIONS

CHARACTERISTICS		NVSA 3115	NVSA 3125	NVSA 3135	NVSA 3145
C_V Rating	⅛" NPTF	0.80	0.69	—	—
	¼" NPTF	1.10	0.83	—	—
	⅜" NPTF	—	—	2.58	—
	½" NPTF	—	—	2.58	4.17
	¾" NPTF	—	—	—	4.50
Spool Stroke In (mm)		0.126 (3.2)	0.177 (4.5)	0.197 (5.0)	0.386 (9.8)
Pilot Pressures* PSIG (Kgf/cm²)					
1. To start spool shifting		12 (0.8)	12 (0.8)	5 (0.3)	5 (0.3)
2. To shift spool fully		25 (1.7)	25 (1.7)	10 (0.7)	10 (0.7)
3. Maximum Permissible		100 (6.7)	125 (8.3)	125 (8.3)	125 (8.3)

Media: Air (lubricated or oil-free), any non-flammable, non-toxic, non-corrosive gasses except oxygen.

Leakage: Port to port (internal) not to exceed 0.030 cubic feet per minute at 100 PSIG (6.7 Kgf/cm²).

Operating Pressures: 28" Vacuum to 300 PSIG (20 Kgf/cm²)

Materials: All housing parts aluminum die castings. Spool and sleeve 440F stainless steel, heat treated to 58-62 Rockwell C, and passivated. Sleeve O-rings Buna N. Spacer and spring seat Delrin. Bumper urethane rubber.

Maximum ambient temperature: 140°F. (60° C.)

*Note: These pilot pressures apply only to clean, well lubricated valves.

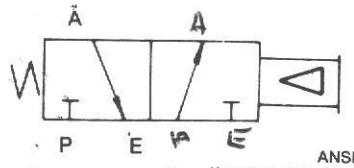

ANSI Symbol
(As a normally closed 3-way)

MULTI-PURPOSE APPLICATIONS

FOR USE AS:	PORT "A"	PORT "P"	PORT "E"
2-Way Normally Closed	Outlet	Supply	Plug
2-Way Normally Open	Outlet	Plug	Supply
3-Way Normally Closed	Outlet	Supply	Exhaust
3-Way Normally Open	Outlet	Exhaust	Supply
Diverter	Supply	Outlet	Outlet
Two-pressure selector	Outlet	Supply 1	Supply 2

HOW TO ORDER

This model number is a coded number which describes all available options.

NVSA 3 1 [1] [5] - [01] [N]

Valve Size
1 = Class 1
2 = Class 2
3 = Class 3
4 = Class 4

Mounting Style
4 = Valve unit only (NVSA3114 only; see page 7)
5 = Foot mounting; pipe tap in body

Porting
00 = Manifold mounting (NVSA 3114)
01 = 1/8" NPTF (VSA 3115, 3125)
02 = 1/4" NPTF (NVSA 3115, 3125)
03 = 3/8" NPTF (NVSA 3135)
04 = 1/2" NPTF (NVSA 3135, 3145)
06 = 3/4" NPTF (NVSA 3145)

Optional Features
N = with Recessed non-locking operator
O = without Manual operator

NVSA 3135, 3145 only
H = Internal pilot connection in junction box, recessed non-locking operator
S = Internal pilot connection in junction box, no operator

NVSA 3115

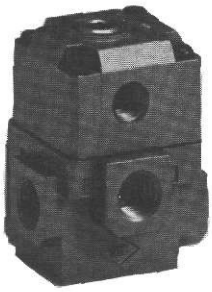

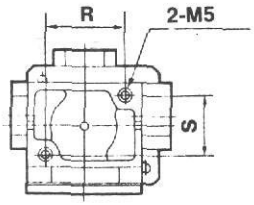

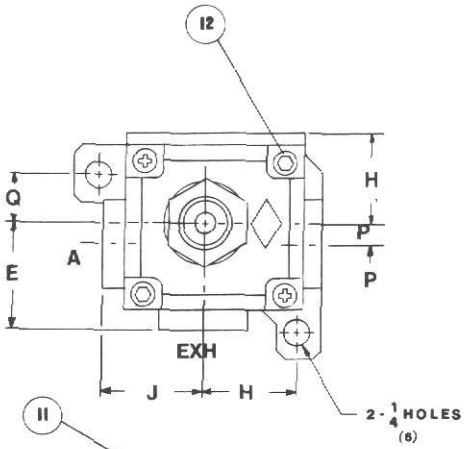

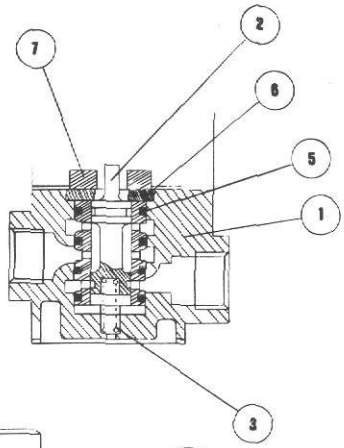

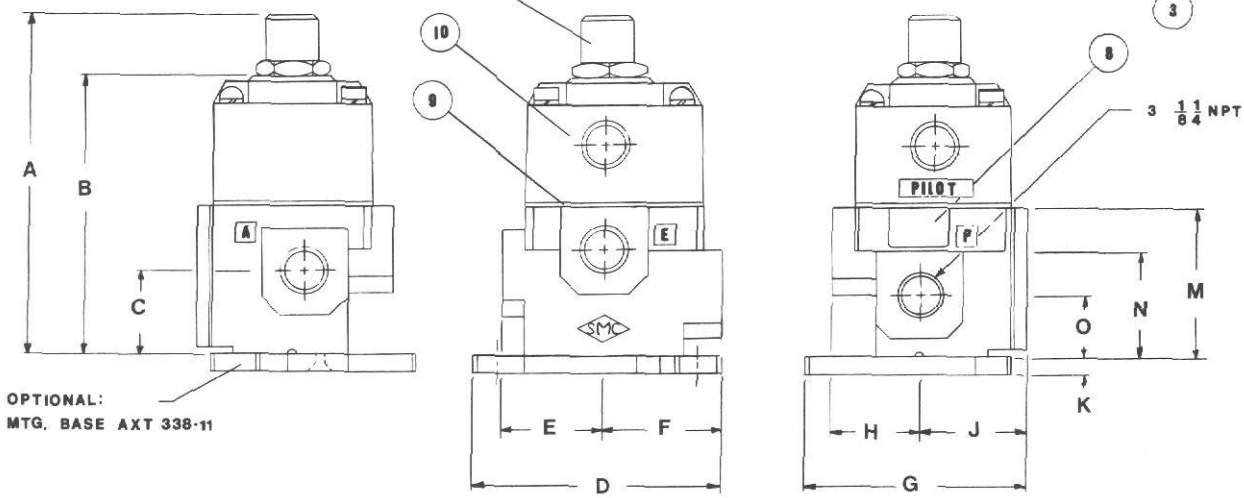

DIMENSIONS

A	B	C	D	E	F	G	H	J	K	M	N	O	P	Q	R	S
2.95 (75)	2.52 (64)	0.75 (19)	2.24 (57)	0.91 (23)	1.06 (27)	1.97 (50)	0.83 (21)	0.94 (24)	0.16 (4)	1.34 (34)	1.22 (31)	0.55 (14)	0.12 (3)	0.47 (12)	0.73 (18.6)	0.98 (25)

Millimeters in Parentheses

NOTES

PARTS LIST

Del. No.	No. Req'd.	Part Name	Part Number
1	1	*Body* 1/8" NPTF 1/4" NPTF	– –
2	1	Spool & Sleeve Ass'y.	–
3	1	Spring	AXT338-6
5	4	*O-Ring*	*ARP568-014*
6	2	O-Ring	ARP568-016
7	1	Bushing	AXT338-14
8	1	Grommet	AXT338-9
9	1	Cushion	AXT338-5
10	1	Pilot Cover	–
11	1	Recessed non-locking operator (includes O-ring seal)	PB0103
12	2	*Screw M4 x 30 with washer*	AXT338-10

VSA 3125

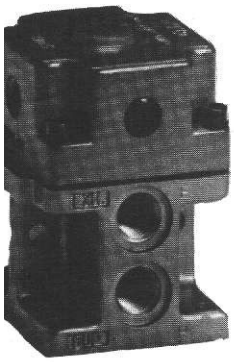

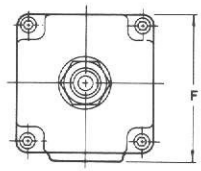

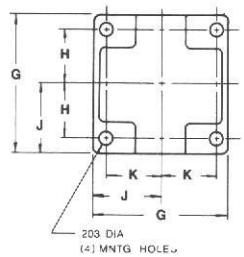

FOOT MOUNTING
PRIMARY MOUNTING METHOD IS FOOT MOUNTING ON THE END OF THE BODY. THE VALVE MAY BE MOUNTED IN ANY POSITION IN SPACE BUT IF IT IS MOUNTED WITH THE EXHAUST PORT UP WE RECOMMEND THAT YOU PROTECT THE OPEN PORT WITH A MUFFLER OR ELBOW FITTING. MAXIMUM LENGTH OF MOUNTING SCREW IS 1" OVERALL INCLUDING HEAD.

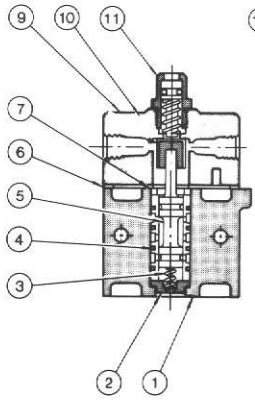

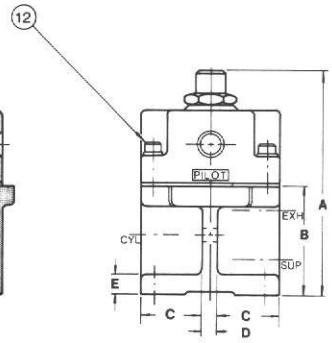

MANIFOLD MOUNTING
O-RING COUNTERBORES ON ALL PORTS ALLOW MANIFOLD MOUNTING ON ANY FLAT SURFACE
SCREW HOLES ARE CLEARANCE HOLES FOR #10 SCREW, BUT CAN BE REAMED OUT TO CLEAR A 1/4" SCREW.

OPTIONAL
PILOT COVER
WITHOUT MANUAL OPERATOR

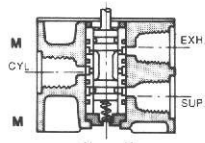

PIPE TAP IS 1/8" NPTF OR 1/4" NPTF AS SPECIFIED BY MODEL NUMBER

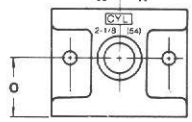

ALL PORTS
11/16 DIA. x 3/32 DEEP
C'BORE FOR ARP568-112 O-RING

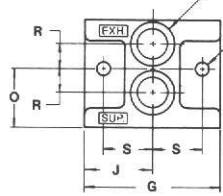

.219 DIA
(2) MTG. HOLES
(CLEARANCE FOR
#10-32 SCREW)

O-RING MANIFOLD
MOUNTING PATTERN

DIMENSIONS

A	B	C	D	E	F	G	H	J	K	M	N	O	P	R	S
3.54 (90)	1.77 (45)	0.94 (24)	0.24 (6)	0.31 (8)	2.24 (57)	2.13 (54)	0.83 (21)	1.06 (27)	0.87 (22)	0.39 (10)	0.79 (20)	0.98 (25)	2.13 (54)	0.39 (9.9)	0.78 (19.8)

Millimeters in Parentheses

PARTS LIST

Det. No.	No. Req'd.	Part Name	Part Number
1	1	Valve Body— 1/8" NPTF 1/4" NPTF	— —
2	1	Spring Seat	XT018-4
3	1	Spring—spool return	XT005-10
4	4	O-ring—Sleeve	ARP568-014
5	1	Sleeve assembly—consists of spool and sleeve (matched set) and (4) detail4	—
6	1	Gasket—Pilot Cover	XT024-3
7	1	Spacer	AXT018-5
9	1	Pilot cover assembly with operator. Consists of details 10, 11, (4) detail 12 and (3) 1/8" NPTF flush plugs	
10	1	Pilot cover	—
11	1	Recessed non-locking operator (Includes O-ring Seal)	PB0102
12	4	Captive screw—pilot cover	XT012-25B
13	1	Pilot cover assembly without operator. Consists of details 10, 14, (4) detail 12, and (3) 1/8" NPTF flush plugs	—
14	1	Plug—operator mounting hole	B2301-1/4

NVSA 3135

NVSA 3145

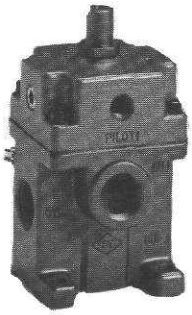

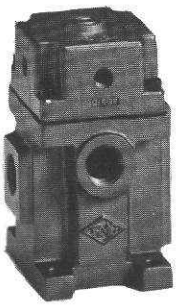

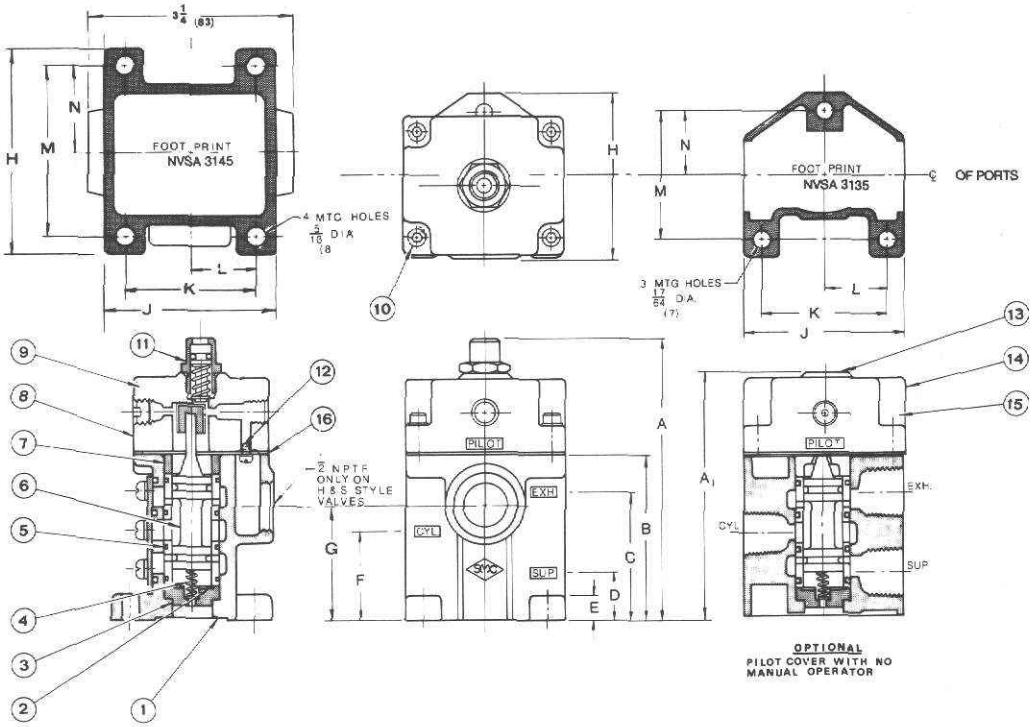

DIMENSIONS

VALVE SIZE	A	A1	B	C	D	E	F	G	H	J	K	L	M	N
NVSA 3135	4.41 (112)	3.86 (98)	2.56 (65)	2.01 (51)	0.75 (19)	0.35 (9)	1.38 (35)	1.77 (45)	2.56 (65)	2.52 (64)	1.97 (50)	0.98 (25)	1.97 (50)	0.98 (25)
NVSA 3145	5.75 (146)	5 (127)	3.46 (88)	2.80 (71)	1.38 (35)	0.47 (12)	2.09 (53)	2.56 (65)	3.19 (81)	3.23 (82)	2.05 (52)	1.02 (26)	2.60 (66)	1.30 (33)

Millimeters in Parentheses

PARTS LIST

Det. No.	No. Req'd.	Part Name	NVSA 3135	NVSA 3145
1	1	*Valve Body*	—	—
2	1	Bumper — spring end	XT013-15	AXT021-14
3	1	Spring seat	XT019-6	AXT103-4
4	1	Spring — spool return	XT010-15	XT103-5
5	4	O-ring — sleeve	ARP568-018	ARP568-119
6	1	Sleeve assembly — consists of spool and sleeve (matched set) and (4) detail 5	—	—
7	1	Spacer	AXT365-3	XT029-6
8A	1	Pilot cover assembly with manual operator but no junction box pilot connection. Consists of detail 9, 11, (4) detail 10 and (3) 1/8" NPTF flush plugs	—	—
8B	1	Pilot cover assembly with manual operator and with junction box pilot connection. Consists of details 9A, 11, 12B, (4) detail 10 and (4) 1/8" NPTF flush plugs	—	—
9	1	Pilot cover without #10-32 pilot connection.		
9A	1	Pilot cover with #10-32 pilot connection		
10	4	Captive screw — pilot cover	XT012-25B	XT012-25B
11	1	Recessed non-locking operator	PB0102	PB0402
12A	1	#10-32 plug and gasket	XT015-3/4	XT015-3/4
12B	1	#10-32 to 1/16" I.D. tube barb	211-1	211-1
13	1	Plug — operator mounting hole	B2301-1/4	B2301-1/4
14	1	Pilot cover assembly without manual operator and without junction box pilot connection. Consists of details 9, 13, (4) detail 10 and (3) 1/8" NPTF flush plugs	—	—
15	1	Pilot cover assembly without manual operator but with junction box pilot connection — consists of details 9A, 13, 12B, (4) detail 10 and (4) 1/8" NPTF flush plugs	—	—
16	1	Gasket — pilot cover	XT027-3	XT029-3

An optional manifold mounted design is available for the NVSA 3115 valves. The block is aluminum bar stock with common supply and exhaust as well as an individual outlet port on the side.

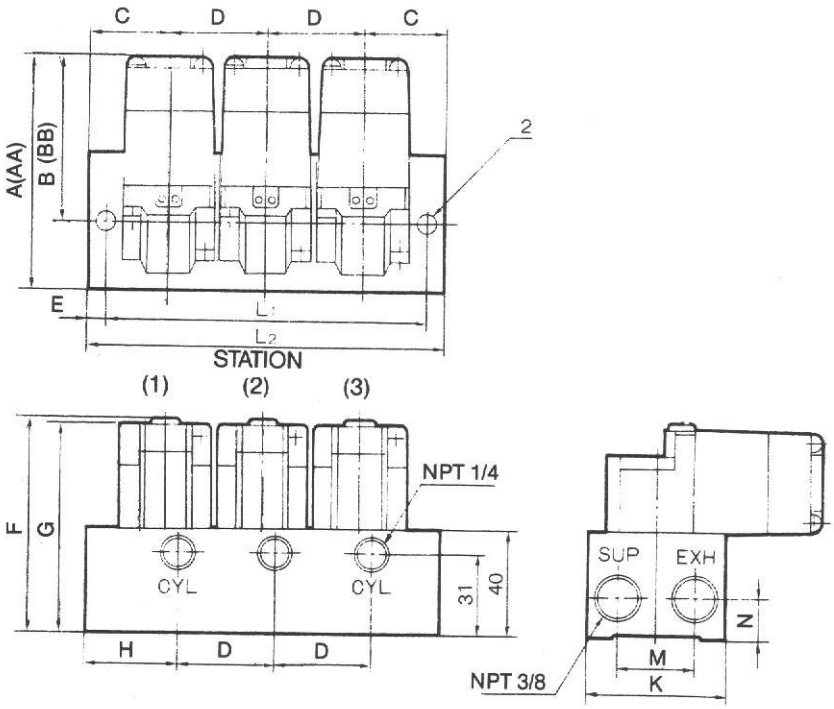

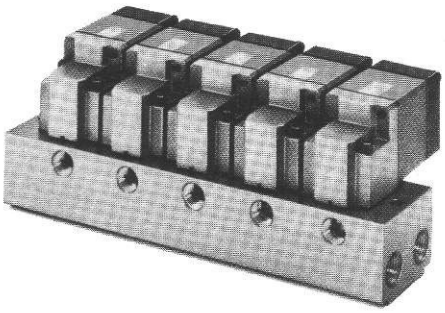

HOW TO ORDER

NVSA 3114-00 N

Refer to page 3
HOW TO ORDER

ORDERING EXAMPLE:

1 PCE—FOUR STATION MANIFOLD ASSEMBLY COMPRISING:

STATION 1: NVSA 3114-000
STATION 2: NVSA 3114-000
STATION 3: NVSA 3114-000
MA 300-03

MA300-XX
Assy. Kit (when factory assembled)

XX = No. of Stations

IMENSIONS

A	AA*	B	BB*	C	D	E	F	G	H	K	M	N
3.58 (91)	4.61 (117)	2.56 (65)	3.58 (91)	1.22 (31)	1.50 (38)	0.26 (6.5)	3.29 (83.5)	3.23 (82)	1.42 (36)	2.05 (52)	1.10 (28)	0.59 (15)

Dimension if DC Solenoid is Used

Millimeters in Parentheses

IANIFOLD DIMENSIONS

L \ n	2	3	4	5	6	7	8	9	10
L_1	3.43 (87)	4.92 (125)	6.42 (163)	7.91 (201)	9.41 (239)	10.91 (277)	12.40 (315)	13.90 (353)	15.39 (391)
L_2	3.94 (100)	5.43 (138)	6.93 (176)	8.43 (214)	9.92 (252)	11.42 (290)	12.91 (328)	14.41 (366)	15.91 (404)

Millimeters in Parentheses

DIRECTIONAL AIR VALVE

AIR PILOT OPERATED

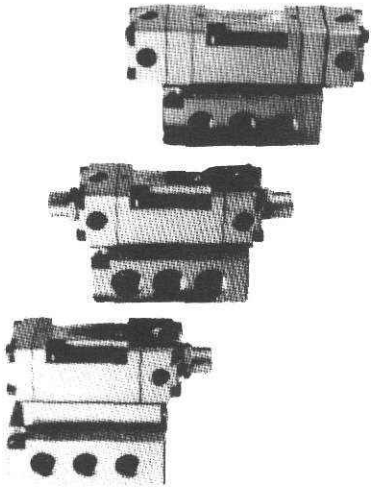

ANSI Symbol

NVSA 4114

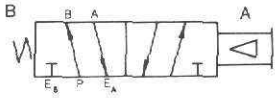

NVSA 4214

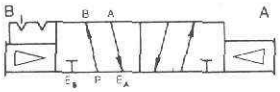

NVSA 4314

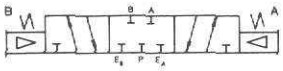

NVSA 4414

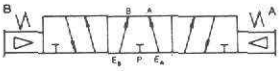

NVSA 4514

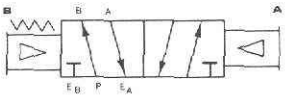

SPECIFICATIONS

Characteristics	NVSA 4○14	
Cv Rating on sub-plates:	⅛″ NPT C_V 0.8 ¼″ NPT C_V 1.0 ⅜″ NPT C_V 1.0	
Operating	NVSA 4114 4214 4514	NVSA 4314/4414
Spool Stroke:	0.126″ (3.2 mm.)	0.236″ (6 mm.)
Pilot Pressures:* 1. To start spool shifting 2. To shift spool fully 3. Maximum permissible.	8 PSIG (0.55 Bar) 18-20 PSIG (1.24 Bar) 150 PSIG (10.3 Bar)	18 PSIG 25 PSIG 150 PSIG (10.3 Bar)

Media: Air (lubricated or oil-free), any non-flammable, non-toxic, non-corrosive gases except oxygen.

Leakage: Port to port (internal) not to exceed 0.007 cubic feet per minute at 100 PSIG (6.9 Kgf/cm^2).

Operating Pressures: 28″ Vacuum to 300 PSIG (20 Kgf/cm^2).

Materials: All housing parts aluminum die castings. Spool and sleeve 440F stainless steel, heat treated to 58-62 Rockwell C and passivated. Sleeve O-rings Buna N. Spacers Delrin, Bumper urethane rubber.

Maximum ambient temperature: 140°F. (60°C.)

*Note: These pilot pressures apply only to a clean, well lubricated valve.

MULTI-PURPOSE FLOW PATTERN

True multi-purpose valve. Any port may be pressurized, back-pressured, or plugged without affecting spool action. ANSI symbol shows the valve as a single inlet 4-way, but valve may be used, without modification, as a dual inlet 4-way, a 3-way, or a 2-way, by piping and/or plugging the appropriate ports.

MOUNTING

Intended for sub-plate or manifold mounting. May be mounted in any position.

DESIGN

This design concept consists of a Match-Ground "SPOOL & SLEEVE" assembly which controls the main valving functions. This match-ground fit creates an "Air Bearing" effect for extended and efficient operation and eliminates the need for resilient seals. Large capacity air flows are achieved by application of the SMC U.S. Patents applicable to this type of valve. Should the valve require disassembly for maintenance the Spool and Sleeve should be retained as a unit.

GENERAL

Heavy duty air valves built to comply with JIC and all industrial standards. Designed specifically for use in co-operation with air logic. Recessed non-locking manual operator available on all models. Type "N" and "O" valves operate through "external" pilot pressure supply port on top of valve. Type "A" and "B" valves may be operated through "internal" pilot pressure supply port situated in either their sub-plate (SPA) or stacking manifold blocks (MBA).

PILOT IDENTIFICATION:

The official standard for diagramming air logic is National Fluid Power Association Recommended Standard T3.28.9-1973 "Method of Diagramming for Moving Part Fluid Controls." The entire standard is built around the identification of the pilots as "A" and "B". The valve body carries this identification and conforms with the NFPA standard.

PILOT PRESSURE CHARACTERISTICS

The spool has no seals, and is balanced to air pressures. Thus the pressure in the valve has no effect on the pilot pressure required to shift the spool. The pilot pressure required is always constant, regardless of the pressure in the main passages.

This feature makes the valves the ideal companion for air logic systems, assuring a constant response from cycle to cycle. No other type of valve action provides this constant response.

The standard output pressure for moving part air logic is 50 PSIG. (3.44 Bar). The low pilot pressure required by these valves gives extremely fast response to energize. Minimum volume of the pilot chamber, and small swept volume displaced by the short-stroke spool also aid fast response.

PILOT PRESSURE PORTS

Type A & B SMC Class 1 valves are designed to accept Pilot Pressures "Internally." Interconnecting pilot passages located in the base of the valve automatically channel pilot air to the appropriate operating chamber's of the valve when the valve is mounted onto either a pilot ported subplate or the MBA manifold blocks. This eliminates the need of disconnecting pilot lines when valve is replaced in the field.

HOW TO ORDER

This model number is a coded number which describes all available options.

NVSA 4 [2] 1 4 - [00] [A] [M]

Type of Actuation

. Single Pilot, Spring return
. Double Pilot, detented
. Double Pilot, spring centered (all ports blocked in neutral)
. Double Pilot, spring centered (cyl. ports open to exhaust in neutral)
. Double Pilot, spring offset

Porting

0 = Indicates valve unit only — no base (Includes sub-plate gasket & hold down bolts)

Use For Valve Type

N&O	A&B	
41	*51	= Mounted on individual sub-plate—⅛" NPT side ports (5) — dual exhaust
42	*52	= Mounted on individual sub-plate — ¼" NPT side ports (5) — Dual exhaust
43	*53	= Mounted on individual sub-plate — ⅛" NPT side & bottom ports (10) — dual exhaust
44	*54	= Mounted on individual sub-plate — ¼" NPT bottom ports (5) — dual exhaust
45	*55	= Mounted on individual sub-plate — ⅜" NPT side ports (5) — dual exhaust
11	*12	= Mounted on stacking manifold block ¼" NPT side ports (2)
13	*14	= Mounted on stacking manifold block ¼" NPT side & bottom ports (4)
15	*16	= Mounted on stacking mounted block ¼" NPT side (2) & bottom (5) ports

*These manifolds & sub-plates incorporate ⅛" NPT "pilot pressure" ports for supplying "internal" pilot pressure to the valves.

*Type A and B valves only

Optional

M = Interface Speed Control
V1 = Red Pilot Indicator
V2 = Green Pilot Indicator

Optional Features

A = Recessed non-locking operator, -pilot pressure, access through base of valve.
B = No operator — Pilot pressure access through base of valve.
N = Recessed non-locking operator, -"External" pilot connection.
O = No operator — "External" pilot connection.

To Specify "Factory Built" Valve/Manifold Assembly:

1. Establish the number of stations required.
2. Select the type of valve required on each station.
3. Choose Manifold Block desired. e.g. #12, #14 or #16.
4. To specify a valve mounted on a manifold block — **Insert** manifold number into valve number i.e. **NVSA 4114-11N is a NVSA 4114-00N valve mounted on a #11 block.**

To Order "Factory Built" Valve/Manifold Assembly:

EXAMPLE 1 Pce. Four Station Manifold Ass'y comprising:-
Station 1. **NVSA 4114-12A**
Station 2. **NVSA 4114-14A**
Station 3. **NVSA 4214-12A**
(3) Blocking Discs in P, EA & EB galleries.
Station 4. #16 Manifold Block & Blank Station Kit
1. ME 401LR-4 Assembly Kit

SUBPLATES AND MANIFOLDS

To order valves mounted on subplates or manifolds, insert "XX" into Valve No.)
Example: NVSA 4114-"XX"A

SUBPLATES (N & O Type Valve)

PART NO.	PORTING	(No. of Ports)	"XX"
SP 0111	⅛" NPTF Side	(5)	41
SP 0112	¼" NPTF Side	(5)	42
SP 0113	⅛" NPTF Side (5), ⅛" NPTF Bottom	(5)	43
SP 0114	¼" NPTF Bottom	(5)	44
SP 0115	⅜" NPTF Side	(5)	45

SUBPLATES (A & B Type Valve ⅛" NPTF Pilot Ports)

PART NO.	PORTING	(No. of Ports)	"XX"
SPA 0111	⅛" NPTF Side	(5)	51
SPA 0112	¼" NPTF Side	(5)	52
SPA 0113	⅛" NPTF Side (5), ⅛" NPTF Bottom	(5)	53
SPA 0114	¼" NPTF Bottom	(5)	54
SPA 0115	⅜" NPTF Side	(5)	55

MANIFOLDS

PART NO.	PORTING	(No. of Ports)	"XX"
MBA 4010-02	¼" Side	(2)	12
MBA 4011-02	¼" Side, ¼" Bottom A & B	(4)	14
MBA 4210-02	¼" Side (2), ¼" Bottom	(5)	16

ACCESSORIES

PART NUMBER	DESCRIPTION	PCS. REQ.
ME 401 LR	Left & Right End Plates Includes (3) O-Rings ARP 565-015 (1) Plug AXT 336-9	1 Pr.
ME 401 SLR	Left & Right End Plates - Short w/o Conduit NPT Threads. Includes (3) O-Rings ARP 568-015	1 Pr.
AXT 336-5-*	Tierods - Includes (2) M6X25 Screws Per Rod	2 Req.
AXT 336-4-*	Conduit Cover - Includes (4) 8.32 x ⅝" screws. Note: Not required if using ME401SLR End Plates.	1
AXT 336-6	Gallery Blocking Disc.	—
AXT 336-7A	Blank Station Kit	—
AXT 337-4	Right - Pilot Air Gasket	—
AXT 337-5	Left - Pilot Air Gasket	—
ARP 568-015	(3) Manifold O-Ring	—

*ADD No. of Stations

NVSA 4114

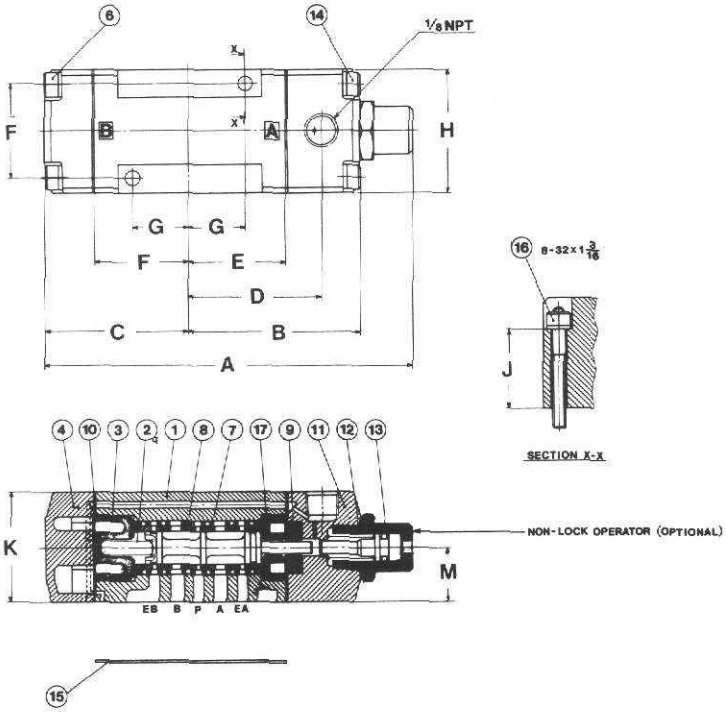

Dimensions

A	B	C	D	E	F	G	H	J	K	M
4.17 (105.8)	1.95 (49.5)	1.63 (41.3)	1.52 (38.5)	1.10 (28)	1.06 (27)	0.63 (16)	1.42 (36)	0.91 (23)	1.26 (32)	0.61 (15.5)

Millimeters in Parentheses

PARTS LIST

DETAIL REF.	DESCRIPTION	MATERIAL	PART NO.	
1	Body	Alum. D.C.	—	
2	Spring - Return	—	AXT 333-9-3	
3	Spring Seat	—	AXT 333-8	
4	End Cap w/(4) Screws	Alum. D.C.	EC 0111-1	
5	End Cap	Alum. D.C.	—	
6	Screws - End Cap (4)	—	—	
7	Spool & Sleeve Ass'y.	440F. S.S.		
8	O-Rings - S & S (6)	Buna N	ARP 568-014	
9	Cushion-Pilot Cover "A" end	—	AXT 334-5N	
10	Gasket-Pilot Cover & End Cap (2)	Buna N	AXT 334-7N-1	
	PILOT COVERS		**"A" END**	**"B" END**
11A	Type "O" w/o Operator, w/(4) screws (2)	Alum. D.C.	PC 0100-1	
11B	Type "N" w/Operator & (4) Screws (2)	Alum. D.C.	PC 0101-1	
11C	Type "B" w/o Operator w/(4) Screws	Alum. D.C.	PC 0110-1	—
11D	Type "A" w/Operator & (4) Screws	Alum. D.C.	PC 0111-1	—
12	O-Ring - Operator	Buna N	—	
13	Recessed Non-Locking Operator	—	PB 0103	
14	Screws - Pilot Cover (4)	—	—	
15	Gasket - Subplate	Buna N	AXT 335-12-2	
16	Hold Down Bolt (8.32 x 1 3/16") (2)	—	NXT 333-17-5	
17	Bumper - "A" End	—	AXT 333-10	

NVSA 4214

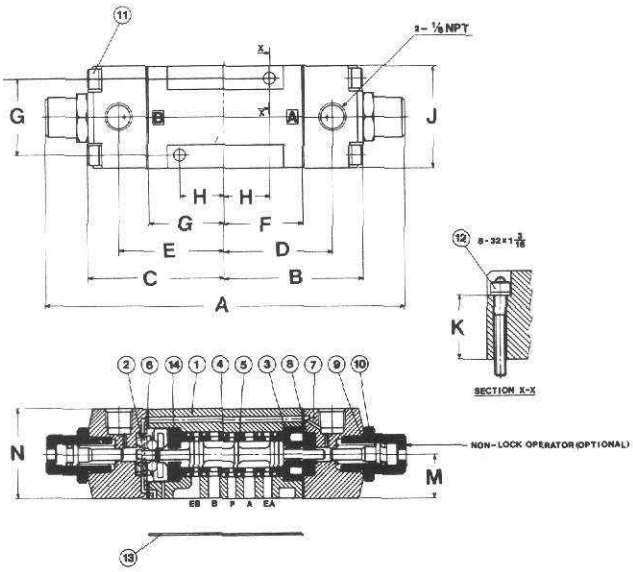

Dimensions

A	B	C	D	E	F	G	H	J	K	M	N
5.12 (130)	1.95 (49.5)	1.99 (50.5)	1.52 (38.5)	1.48 (37.5)	1.10 (28)	1.06 (27)	0.63 (16)	1.42 (36)	0.91 (23)	0.61 (15.5)	1.26 (32)

Millimeters in Parentheses

PARTS LIST

DETAIL REF.	DESCRIPTION	MATERIAL	PART NO.	
1	Body	Alum. D.C.	—	
2	Detent Ass'y.	—	AXT 333-20	
3	Spacer - "A" End	—	AXT 333-10	
4	Spool & Sleeve Ass'y.	440 F.S.S.		
5	O-Ring - S & S (6)	Buna N	ARP 568-014	
6	Gasket - Pilot Covers (2)	Buna N	AXT 334-7N-1	
	PILOT COVERS		**"A" END**	**"B" END**
7A	Type "O" - w/o Operator w/(4) Screws (2)	Alum. D.C.	PC 0100-1	
7B	Type "N" - w/Operator & (4) Screws (2)	Alum. D.C.	PC 0101-1	
7C	Type "B" - w/o Operator w/(4) Screws (ea.)	Alum. D.C.	PC 0110-1	PC 0120-1
7D	Type "A" - w/Operator & (4) Screws (ea.)	Alum. D.C.	PC 0111-1	PC 0121-1
8	Cushion-Pilot Cover "A" End	—	AXT 334-5N	
9	O-Ring - Operator	Buna N	—	
10	Recessed Non-Locking Operator	—	PB 0103	
11	Screws - Pilot Covers (4)	—	—	
12	Hold Down Bolt (8.32 x 1 3/16")	—	NXT 333-17-5	
13	Gasket - Subplate	Buna N	AXT 335-12-2	
14	Cushion - "B" End	—	AXT 334-5	

DIRECTIONAL AIR VALVE

DIMENSIONS
PARTS LIST

SA 4314/4414

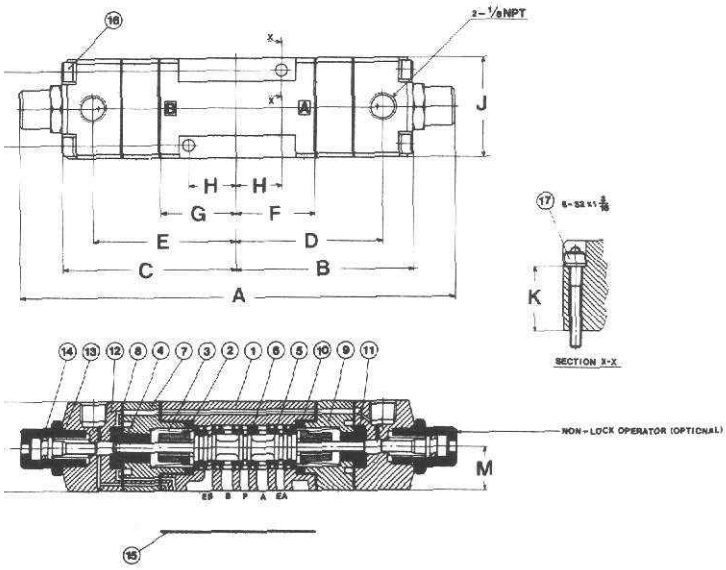

Dimensions

A	B	C	D	E	F	G	H	J	K	M	N
6.10 (155)	2.48 (63)	2.44 (62)	2.05 (52)	2.01 (51)	1.10 (28)	1.06 (27)	0.63 (16)	1.42 (36)	0.91 (23)	0.61 (15.5)	1.26 (32)

Millimeters in Parentheses

PARTS LIST

DETAIL REF.	DESCRIPTION	MATERIAL	PART NO.	
1	Body	Alum. D.C.	—	
2	Spring Seat (2)	—	AXT 334-10	
3	Spring - Centering (2)	—	AXT 334-14	
4	Cushion-Pilot Cover "B" End	—	AXT 334-12-2	
5	Spool & Sleeve	440F S.S.		
6	O-Ring - S & S (6)	Buna N	ARP 568-014	
7	Spacer - "B" End	—	AXT 334-16-2	
8	Gasket - Pilot Cover & Spacers (4)	Buna N	AXT 334-7N-1	
9	Spacer - "A" End	—	AXT 334-16-1	
10	Bushing - Body (2)	—	AXT 334-22-6	
11	Cushion-Pilot Cover "A" End	—	AXT 334-12-1	
	PILOT COVER		**"A" END**	**"B" END**
12A	Type "O" - w/o Operators w/(4) Screws (ea.) (2)	Alum. D.C.	PC 0102-1	
12B	Type "N" - w/Operator & (4) Screws (ea.) (2)	Alum. D.C.	PC 0103-1	
12C	Type "B" - w/o Operator, w/(4) Screws (ea.)	Alum. D.C.	PC 0112-1	PC 0122-1
12D	Type "A" - w/Operator & (4) Screws (ea.)	Alum. D.C.	PC 0113-1	PC 0123-1
13	O-Ring - Operators	Buna N	—	
14	Recessed Non-Locking Operators	Alum. D.C.	PB 0103	
15	Gasket - Subplate	Buna N	AXT 335-12-2	
16	Screws - Pilot Cover (4)	—	AXT 334-10-1	
17	Hold Down Bolts (8.32 x 1 3/16") (2)	—	NXT 333-17-5	

SA 4514

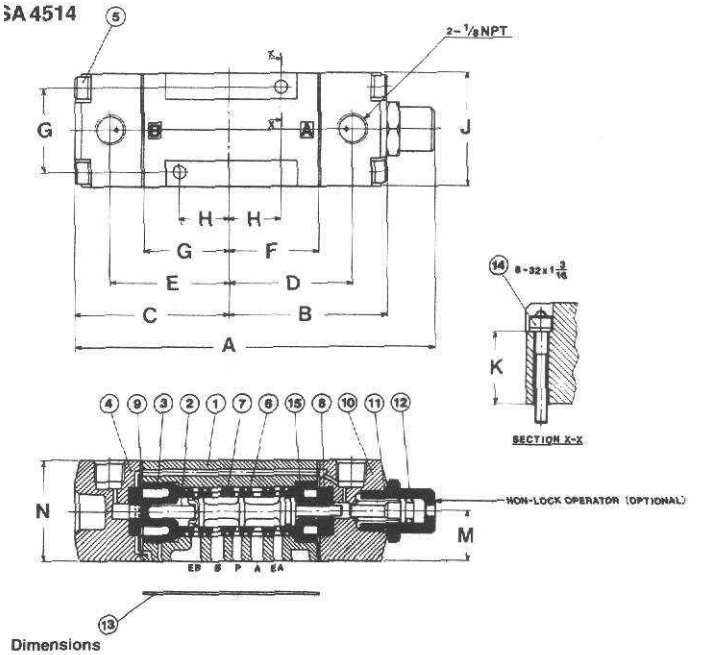

Dimensions

A	B	C	D	E	F	G	H	J	K	M	N
4.53 (115)	1.95 (49.5)	1.99 (50.5)	1.52 (38.5)	1.48 (37.5)	1.10 (28)	1.06 (27)	0.63 (16)	1.42 (36)	0.91 (23)	0.61 (15.5)	1.26 (32)

Millimeters in Parentheses

PARTS LIST

DETAIL REF.	DESCRIPTION	MATERIAL	PART NO.
1	Body	Alum. D.C.	—
2	Spring - Return	—	AXT 333-9-3
3	Spring - Seat	—	AXT 333-8
	PILOT COVER "B" END		
4A	Type "N & O" w/(4) Screws	—	PC 0100-1
4B	Type "A & B" w/(4) Screws	—	PC 0111-1
5	Screw - Pilot Cover (4)	—	—
6	Spool & Sleeve Ass'y.	440F. S.S.	
7	O-Ring - S & S (6)	Buna N	ARP 568-014
8	Cushion - Pilot Covers "A & B" (2)	—	AXT 334-5N
9	Gasket - Pilot Covers (2)	Buna N	AXT 334-7N-1
	PILOT COVERS "A" END		
10A	Type "O"	Alum. D.C.	PC 0100-1
10B	Type "N"	Alum. D.C.	PC 0101-1
10C	Type "B"	Alum. D.C.	PC 0110-1
10D	Type "A"	Alum. D.C.	PC 0111-1
11	O-Ring - Operator	Buna N	—
12	Recessed Non-Locking Operator	—	PB 0103
13	Gasket - Subplate	Buna N	AXT 335-12-2
14	Hold Down Bolts (8.32 x 1 3/16")	—	NXT 333-17-5
15	Spacer "A" End	—	AXT 333-10

DIRECTIONAL AIR VALVE
SUBPLATES

General:
Sub-plates are heavy duty aluminum die castings. All ports are marked with identification in accordance with American National Standards Institute standard ANSI B93.9-1969 "Symbols for Marking Electrical Leads and Ports on Fluid Power Valves."

Pilot Pressure Ports:
Style "SP" sub-plates do not provide for pilot pressure connections through the sub plate.
Style "SPA" sub-plates incorporate (2) ⅛" NPT "Pilot Pressure" ports for supplying "internal" pilot pressure to Type A & B Air Piloted Valves Only.

NOTE — Type "T" solenoid valves provide for electrical wires to exit from the top surface of valve.

SUB-PLATE MODEL NO.	"XX" NO. "SP"	"XX" NO. "SPA"	N P T	PORT LOCATION P	A	B	EA	EB
SP & SPA 0111	41	51	⅛	S	S	S	S	S
SP & SPA 0112	42	52	¼	S	S	S	S	S
SP & SPA 0113	43	53	⅛	S/B	S/B	S/B	S/B	S/B
SP & SPA 0114	44	54	¼	B	B	B	B	B
SP & SPA 0115	45	55	⅜	S	S	S	S	S

"FOOTPRINT"
CLASS 1 SUB-PLATE
MOUNTED 4-WAY VALVES

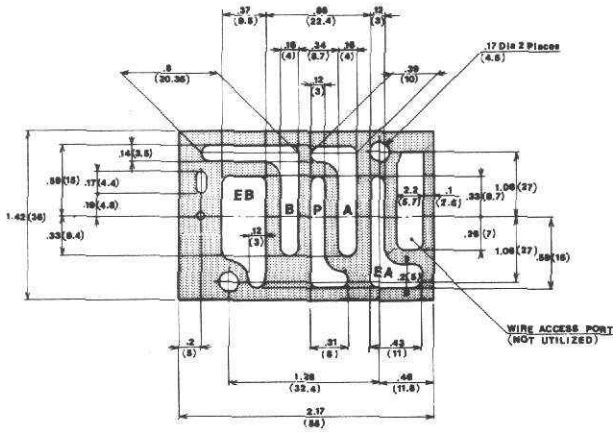

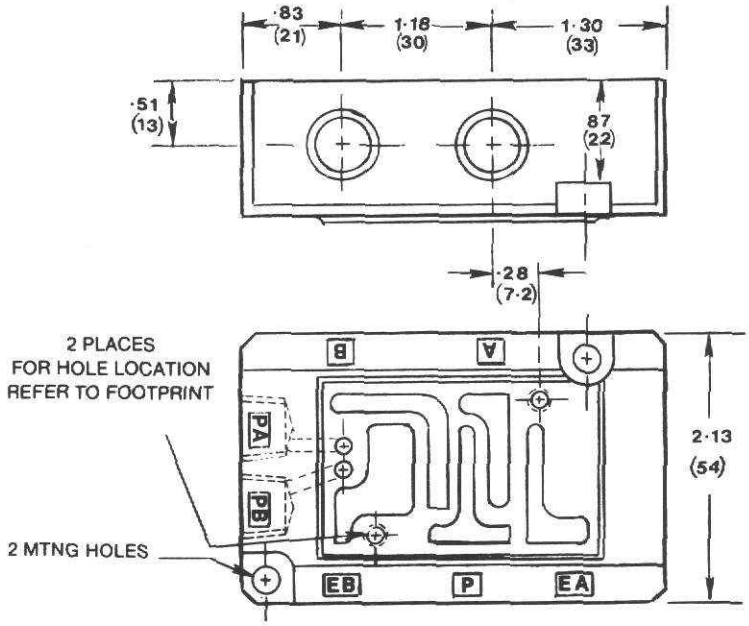

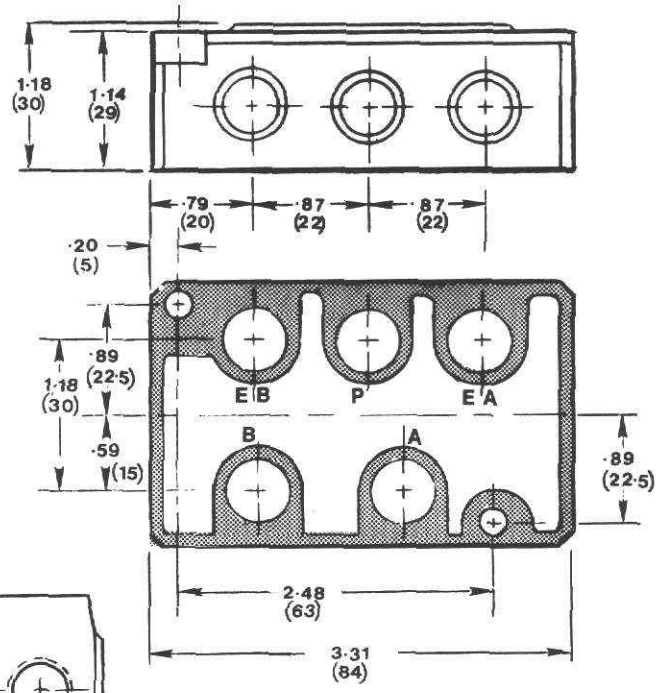

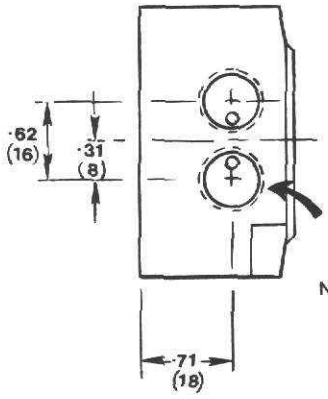

NOTE
PILOT PORTS ONLY IN "SPA" SUBPLATES

NOTE NUMBERS IN PARENTHESES ARE MILLIMETERS

SHADED AREA IS IN CONTACT WITH MOUNTING SURFACE

DIRECTIONAL AIR VALVE
MANIFOLD ASSEMBLY

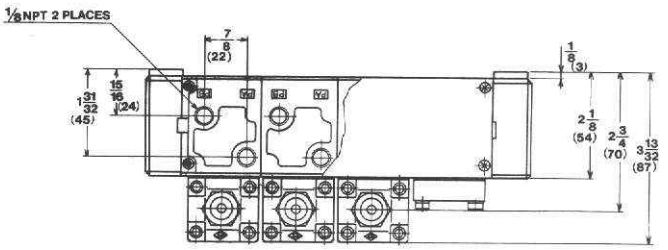

Application

Normally this manifold arrangement is used for Single Pressure, Four Way valve circuitry, where pressure is applied to the (P) common gallery and exhausts through the dual (EA & EB) common galleries. However many other circuit capabilities are easily obtained by the inter-mixing of different types of SMC Multi-Purpose Air Piloted and Solenoid valves in combination with their basic manifold units. The use of Gallery Blocking Disc within the assembly further expands system capabilities. Side cylinder ports "A" & "B" are located on the "B" Pilot side of the manifold and "Station" Identification is obtained by numbering from left to right as viewed from the "B" Solenoid side.

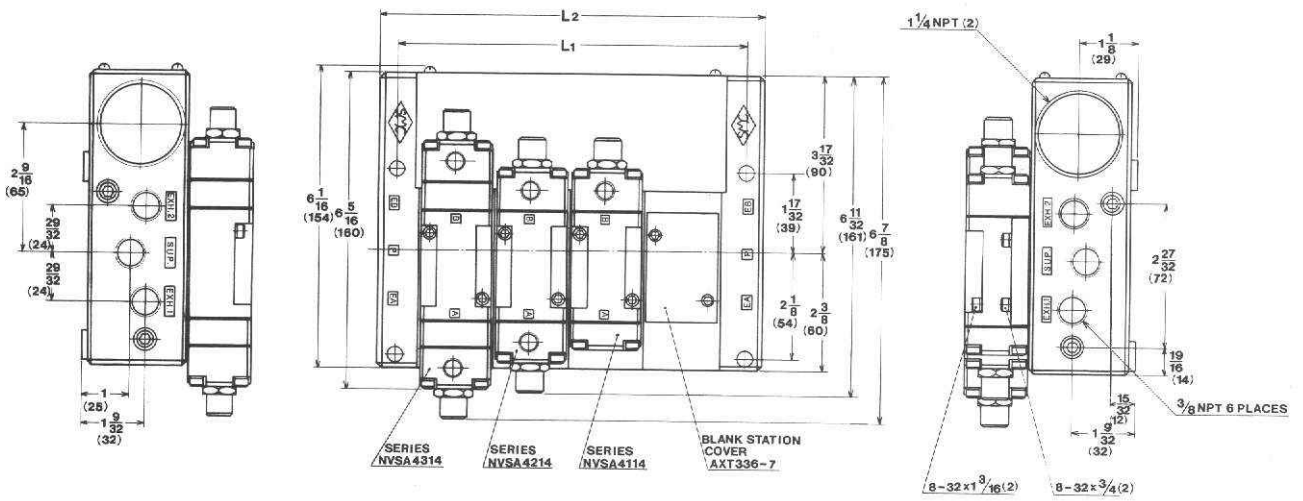

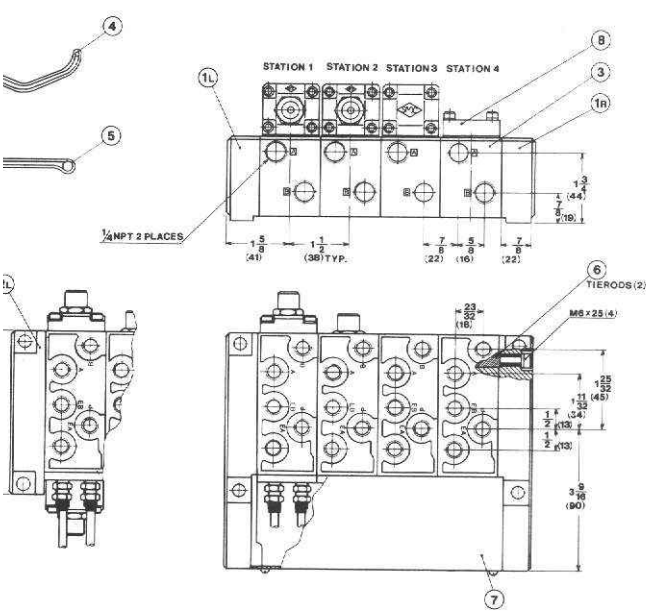

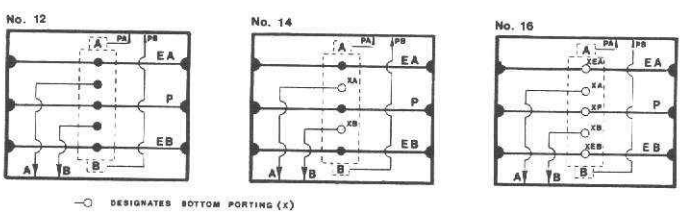

MANIFOLD BLOCK PART NO.	"XX" NO.	PRESSURE		CYLINDER "A & B"		EXHAUST "EA & EB"	
		GALLERY	BOTTOM	SIDE	BOTTOM	GALLERY	BOTTOM
MBA 4010-02	12	Yes	—	1/4" (2)	—	Yes	—
MBA 4011-02	14	Yes	—	1/4" (2)	1/4" (2)	Yes	—
MBA 4210-02	16	Yes	1/4" (1)	1/4" (2)	1/4" (2)	Yes	1/4" (2)

STATIONS	2	3	4	5	6	7	8	9	10
L_1	4 1/32 (103)	5 17/32 (141)	7 1/32 (179)	8 17/32 (217)	10 1/32 (255)	11 7/32 (293)	13 1/32 (331)	14 17/32 (369)	16 1/32 (407)
L_2	4 23/32 (120)	6 7/32 (158)	7 23/32 (169)	9 7/32 (234)	10 23/32 (272)	12 7/32 (310)	13 23/32 (348)	15 7/32 (386)	16 23/32 (424)

$L_1 = 38N + 27$
$L_2 = 38N + 44$

DIRECTIONAL AIR VALVE

INTERFACE SPEED CONTROL
PILOT INDICATORS

INTERFACE SPEED CONTROL

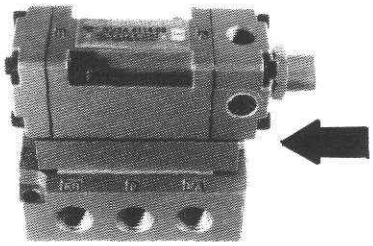

GENERAL

This Speed Control is an Aluminum die cast Interface Plate having on its upper surface a mounting pattern which accepts all SMC Class 1 solenoid and air operated valves and with a lower surface which mounts onto all subplates and manifolds applicable to these Class 1 valves.

INSTALLATION

The Speed Control is mounted between the subplate/manifold and the valve by utilizing ½" longer bolts in place of the standard valve Hold Down bolts. May be field installed without system or piping modifications.

TO ORDER FOR FIELD REPLACEMENT

Kit Number	Comprising of
SPA 0100	1 — #AXT 392 Speed Control Block.
	1 — #AXT 335-12-2 Gasket.
	2 — #NXT 333-17 Hold Down Bolts (#8.32 x 1 ¾)

TO ORDER AS PART OF VALVE/MANIFOLD ASS'Y

ADD Suffix "M" to part number.

Example: Part Number #NVSA 4114-52AM = A #NVSA 4114-00A valve mounted on #SPA 0112 subplate with a #SPA 0100 Interface Speed Control between.

FEATURES

1. Eliminates expense of Piping and "External" Flow Controls.
2. Simplifies installation by eliminating piping.
3. Provides for "Meter-Out" flow adjustments from Zero to 90% of valves' Full Flow capacity in 12 turns of needle.
4. Allows for transfer of "Pilot Pressures" to the valve when used with Type "A" & "B" (Internal pilot) air operated NVSA valves.
5. Improves system appearance.

OPERATION

Cylinder speeds may be independently controlled by adjustment of the needle valves in the "EA" & "EB" ports of the speed control block. *These needle valves control flows of exhaust air from the* valve and are "Vibrationproof" and of "Non-Rising" design.

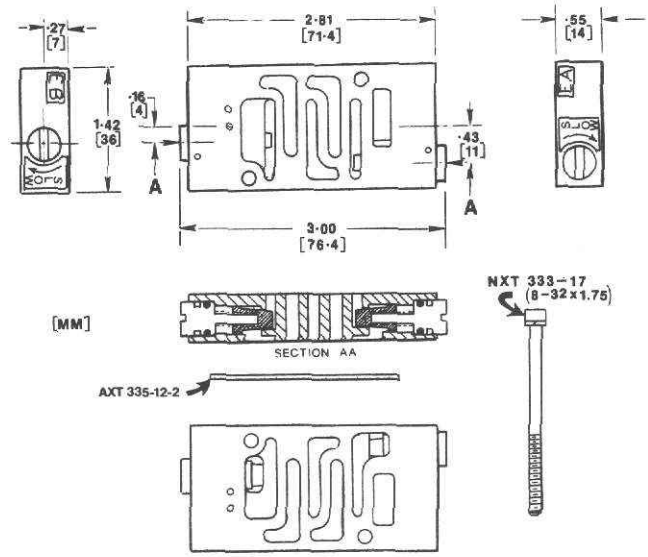

PILOT INDICATORS

These brass plugs when placed into the ⅛" Pilot Ports of an "A or B" style NVSA allow you to know if and when pressure is in the Pilot cavity. You have an option of either a red or green rising pin on your indicator.

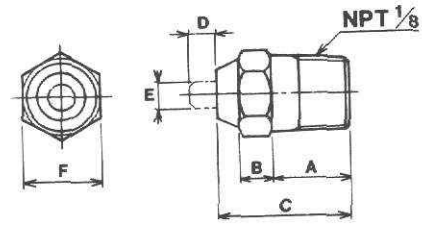

A	B	C	D	E	F
0.39 (10)	0.16 (4)	0.67 (17)	0.12 (3)	0.14 (3.5)	0.39 (10)

HOW TO ORDER

PART NO.	SUFFIX NO.	DESCRIPTION
VR 3110-01R	V1	Red "Pop Up" Indicator ⅛" NPTF
VR 3110-01G	V2	Green "Pop Up" Indicator ⅛" NPTF

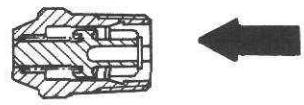

Example: NVSA 4114-52AV2

SPECIFICATIONS

CHARACTERISTICS	NVSA 4○24					NVSA 4○34					NVSA 4○44				
	NVSA 4124	NVSA 4224	NVSA 4324	NVSA 4424	NVSA 4524	NVSA 4134	NVSA 4234	NVSA 4334	NVSA 4434	NVSA 4534	NVSA 4144	NVSA 4244	NVSA 4344	NVSA 4444	NVSA 4544
C_V Rating on Subplates: 1/4"	1.47	1.47	1.47	1.47	1.47	—	—	—	—	—	—	—	—	—	—
3/8"	1.61	1.61	1.61	1.61	1.61	2.39	2.39	2.39	2.39	2.39	—	—	—	—	—
1/2"	—	—	—	—	—	2.72	2.72	2.72	2.72	2.72	3.78	3.78	3.78	3.78	3.78
3/4"	—	—	—	—	—	—	—	—	—	—	4.44	4.44	4.44	4.44	4.44
Spool Stroke: In. (mm)	0.177 (4.5)	0.177 (4.5)	0.394 (10)	0.394 (10)	0.177 (4.5)	0.197 (5)	0.197 (5)	0.434 (11)	0.434 (11)	0.197 (5)	0.386 (9.8)	0.386 (9.8)	0.646 (16.4)	0.646 (16.4)	0.386 (9.8)
Pilot Pressure*: PSIG (Kgf/cm²) 1. To start spool shifting:	4.0 (0.27)	—	3.5 (0.24)	3.5 (0.24)	4.0 (0.28)	6.0 (0.40)	—	3.5 (0.24)	3.5 (0.24)	6.0 (0.41)	8.0 (0.53)	—	6.5 (0.45)	6.5 (0.45)	8.0 (0.55)
2. To shift spool fully:	10-12 (0.69)	10-12 (0.69)	10-12 (0.69)	10-12 (0.69)	10-12 (0.69)	10-12 (0.69	10-12 (0.69)	10-12 (0.69)	10-12 (0.69)	10-12 (0.69)	13-15 (0.87)	8-10 (0.53)	13-15 (0.89)	13-15 (0.89)	13-15 (0.89)
3. To return spool with pressure on "A" pilot:	—	—	—	—	"A" pilot pressure minus 10 (0.69)	—	—	—	—	"A" Pilot Pressure minus 10 (0.69)	—	—	—	—	"A" Pilot Pressure minus 10 (0.69)
4. Maximum Permissable	125 PSIG (8.3 Kgf/cm²)														
Maximum Ambient Temperature:	140° F (60° C)														
Media: Air (lubricated or oil free), any non-flammable, non-toxic, non-corrosive gases except oxygen.															
Leakage: Port to Port (internal) not to exceed 0.035 cubic feet per minute at 100 PSIG (6.9 kgf/cm²)															
Operating Pressures: 28" Vacuum to 300 PSIG (20 kgf/cm²)															
Materials: All housing parts aluminum die castings. Spool and sleeve 440F stainless steel, heat treated to 58-62 Rockwell C and passivated. Sleeve O-Rings Buna N. Spacers Delrin. Bumper urethane rubber.															

*Note: These pilot pressures apply only to a clean, well lubricated valve.

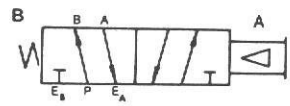
NVSA 41○4

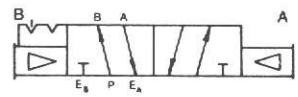
NVSA 42○4

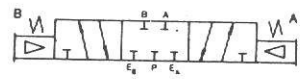
NVSA 43○4

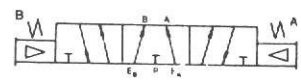
NVSA 44○4


NVSA 45○4

DESIGN

This design concept consists of a Match-Ground "SPOOL & SLEEVE" assembly which controls the main valving functions. This match-ground fit creates an "Air Bearing" effect for extended and efficient operation and eliminates the need for resilient seals. Large capacity air flows are achieved by application of the SMC U.S. Patents applicable to this type of valve. Should the valve require disassembly for maintenance the Spool and Sleeve should be retained as a unit.

GENERAL:

Heavy duty air valves built to comply with JIC and all industrial standards. Designed specifically for use in co-operation with air logic. Optional pilot connection in junction box and large tapped junction box cover allow logic control tubes to be run into the junction box through electrical conduit or air hose used as conduit, thus avoiding exposed control tubes. Junction box is splash-proof and oil-tight.

PILOT IDENTIFICATION:

The official standard for diagramming air logic is National Fluid Power Association Recommended Standard T3,28.9-1973 "Method of Diagramming for Moving Part Fluid Controls. The entire standard is built around the identification of the spring end of the valve as the "B" end, and the pilot end of the valve as the "A" end. The valve body carries this identification and conforms with the NFPA standard.

PILOT PRESSURE CHARACTERISTICS:

The spool has no seals, and is balanced to air pressures. Thus the pressure in the valve has no effect on the pilot pressure required to shift the spool. The pilot pressure required is always constant, regardless of the pressure in the main passages.

This feature makes the valves the ideal companion for air logic systems, insuring a constant response from cycle to cycle. No other type of valve action provides this constant response.

The standard output pressure for moving part air logic is 50 PSIG. (3.4 Kgf/cm²). The low pilot pressure required by these valves gives extremely fast response. Minimum volume of the pilot chamber, and small swept volume displaced by the short-stroke spool also aid fast response.

SINGLE PILOT SPRING RETURN

Air operates the spool directly, and a spring returns the spool when air is exhausted.

DOUBLE PILOT DETENTED

Air operates the spool directly. A mechanical detent holds the spool securely in either spool position, as required by major automotive safety standards. Thus a momentary signal will shift the spool, and the detent will hold the spool in the shifted position until the other pilot is pressurized to shift the spool back.

DOUBLE PILOT 3 POSITION SPRING CENTERED

Air operates the spool directly, while two centering springs hold the spool in the center position. Note that each spring centers the spool by means of a spring seat which seats firmly against the end of the sleeve. Thus the spool always centers accurately. The centering springs do not buck each other as in some spring centered valves.

DOUBLE PILOT SPRING OFFSET

The double pilot spring offset action is an unusual action not available with most other valve constructions. When pilot pressure is introduced into the "A" pilot, this pressure acts on the "A" end of the spool, and when the pressure becomes high enough, it forces the spool toward the "B" end, and compresses the spring. If, while the "A" pilot is pressurized, an equal pressure is introduced into the "B" end (the spring cavity) this pressure acts against the "B" end of the spool, and balances the pressure against the "A" end. Now the spring returns the spool to the normal position, even though the "A" end still has pilot pressure in it.

MULTI-PURPOSE FLOW PATTERN:

True multi-purpose valve. Any port may be pressurized, back-pressured, or plugged without affecting spool action. ANSI symbol shows the valve as a single inlet as a single inlet 4-way, but valve may be used, without modification, as a dual inlet 4-way, a 3-way, or a 2-way, by piping and/or plugging the appropriate ports.

MOUNTING:

Intended for sub-plate or manifold mounting. May be mounted in any position. Interchangeable with certain competitive valves on their sub-plates.

HOW TO ORDER

NVSA 4 [1] [2] 4 - [00] [A] [M]

Type of Actuation
1 = Single Pilot Spring Return
2 = Double Pilot Detented
3 = Double Pilot Spring Centered (All ports blocked in neutral)
4 = Double Pilot Spring Centered (Cylinder ports open to dual supply in neutral)
5 = Double Pilot Spring Offset

Valve Size
1 = Class 1
2 = Class 2
3 = Class 3
4 = Class 4

Options
M = Interface Speed Control
V1 = Red Pilot Indicator
V2 = Green Pilot Indicator

Features
A = Recessed non-locking operator, pilot pressure access through base of valve.
B = No operator—Pilot pressure access through base of valve.
C = Tapped junction box cover, pilot connections in junction box, but no operator.
J = Tapped junction box cover, pilot connections in junction box, recessed non-locking operator.
N = Blank junction box cover, recessed non-locking operator.
O = Blank junction box cover, no operator.

Porting
00 = Indicates valve unit only. No base (Includes subplate gasket and hold down bolts.)

NVSA 4○24
01 = Mounted on Individual Subplate - 1/4″ NPTF Side Ports (5)
51 = Mounted on Individual Subplate - 1/4″ NPTF Side Ports (5); 10-32 Pilot Ports (4)
02 = Mounted on Individual Subplate - 3/8″ NPTF Side Ports (5)
52 = Mounted on Individual Subplate - 3/8″ NPTF Side Ports (5); 10-32 Pilot Ports (4)
03 = Mounted on Individual Subplate - 1/4″ NPTF Bottom Ports (5)
06 = Mounted on Individual Subplate - 1/4″ NPTF Side Supply (1); Bottom Ports (5)
21 = Mounted on Stacking Manifold Block - 3/8″ NPTF Side Ports (4)
23 = Mounted on Stacking Manifold Block - 3/8″ NPTF Side Ports (4); Bottom Ports (2)
28 = Mounted on Stacking Manifold Block - 3/8″ Side Ports (6); Bottom Ports (5)
41 = Mounted on Stacking Manifold Block - 1/2″ NPTF Side Ports (4)

NVSA 4○34
01 = Mounted on Individual Subplate - 3/8″ NPTF Side Ports (5)
02 = Mounted on Individual Subplate - 1/2″ NPTF Side Ports (5)
52 = Mounted on Individual Subplate - 1/2″ NPTF Side Ports (5); 10-32 Pilot Ports (4)
03 = Mounted on Individual Subplate - 3/8″ NPTF Side Ports (5); Bottom Ports (5)
31 = Mounted on Stacking Manifold Block - 3/8″ NPTF Side Ports (4)
33 = Mounted on Stacking Manifold Block - 3/8″ NPTF Side Ports (4); Bottom Ports (2)
38 = Mounted on Stacking Manifold Block - 3/8″ NPTF Side Ports (6); Bottom Ports (5)
51 = Mounted on Stacking Manifold Block - 1/2″ NPTF Side Ports (4)

NVSA 4○44
01 = Mounted on Individual Subplate - 1/2″ NPTF Side Ports (5)
02 = Mounted on Individual Subplate - 3/4″ NPTF Side Ports (5)
03 = Mounted on Individual Subplate - 1/2″ NPTF Side Ports (5); Bottom Ports (5)
04 = Mounted on Individual Subplate - 3/4″ NPTF Side Ports (5); Bottom Ports (5)
05 = Mounted on Individual Subplate - 1″ NPTF Side Ports (5)
06 = Mounted on Individual Subplate - 3/4″ NPTF Side Ports (5)

ERIES
VSA 4◯24, 4◯34
VSA 4◯44

VSA 4124
4134
4144

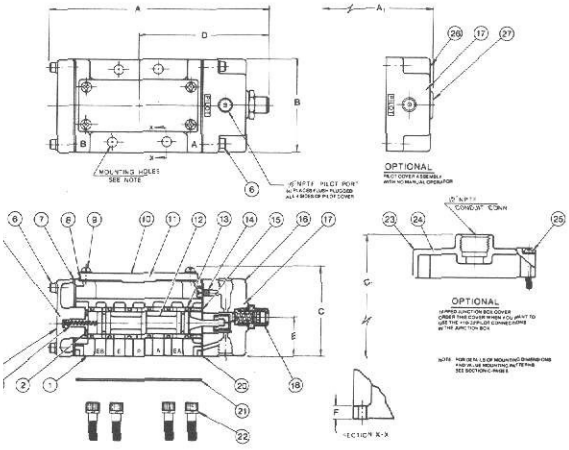

MENSIONS

lve Size	A	A_1	B	C	C_1	D	E	F
VSA 4124	5.39 (137)	4.80 (122)	2.13 (54)	2.36 (60)	3.27 (83)	3.23 (82)	1.06 (27)	0.35 (9)
VSA 4134	6.06 (154)	5.51 (140)	2.52 (64)	2.44 (62)	3.31 (84)	3.58 (91)	1.06 (27)	0.39 (10)
VSA 4144	7.28 (185)	6.54 (166)	2.83 (72)	2.99 (76)	3.86 (98)	4.29 (109)	1.22 (31)	0.47 (12)

Millimeters in Parentheses

PARTS LIST

Det. No.	No. Req'd.	Part Name	NVSA 4124	NVSA 4134	NVSA 4144
1	1	Valve Body			
2	1	Bumper—"B" end	AXT340-10-2	AXT340-10-2	AXT021-14
3	1	Spring—Spool Return	XT010-15	XT010-15	XT021-13A
4	1	End plate assembly—			
5	1	End Plate			
6	8	Captive screw	XT012-25B	XT012-25B	XT012-25B
7	1	Gasket—end plate	NXT010-8	XT013-31-2	NXT030-8
8	1	Gasket—junction box cover	NXT010-9	XT013-12-2	NXT030-19
9	4	Captive screw—blank junction box cover	NXT010-11	NXT010-11	NXT010-11
10	1	Junction box cover assembly—blank.			
11	1	Junction box cover—Blank			
12	1	Sleeve assembly—Consists of Spool and sleeve (matched set) and (6) detail 13			
13	6	O-ring—sleeve	ARP568-018	ARP568-018	ARP568-119
14A	1	#10-32 plug and gasket	NXT015-3/4	NXT015-3/4	NXT015-3/4
14B	1	#10-32 to 1/16" tube barb and gasket	211-1	211-1	211-1
15	1	Spacer	AXT339-5-1B	AXT340-5-1A	XT029-6
16A	1	Pilot cover assembly with manual operator and junction box pilot connection. Consists of details 17A, 14B, 18 and (4) detail 6 and (4) 1/8" NPTF flush plugs.			
16B	1	Pilot cover assembly with manual operator but no junction box pilot connection. Consists of detail 18, (4) detail 6, (3) 1/8" NPTF flush plugs, and detail 17B.			
17A	1	Pilot cover with #10-32 port			
17B	1	Pilot cover without #10-32 port			
18	1	Recessed non-locking operator	PB0102	PB0102	PB0402
20	1	Gasket—pilot cover	XT024-3	XT027-3	XT029-3
21	1	Gasket—valve body to sub-plate	NXT010-14	XT016-3	XT021-9
22	4	Hold-down bolt and lock washer	NXT010-16 (#10-24x3/4)	NXT020-14 (1/4-20x3/4")	NXT030-13 (1/4-20x1")
23	1	Junction box cover assembly—tapped. Includes detail 24 and (4) detail 25.			
24	1	Junction box cover—tapped			
25	4	Captive screw—tapped junction box cover	XT066-7	XT066-7	NXT013-3
26A	1	Pilot cover assembly without manual operator and with junction box pilot connection. Consists of detail 17A, 14B, 27, (4) detail 6 and (4) 1/8" NPTF flush plugs.			
26B	1	Pilot cover assembly without manual operator and without junction box pilot connection. Consists of detail 27, (4) detail 6, (3) 1/8" NPTF flush plugs and detail 17B.			
27	1	Plug for operator mounting hole.	B2301-1/4	B2301-1/4	B2301-1/4

*NVSA 4124 valves require only (3) hold-down bolts.

VSA 4224
4234
4244

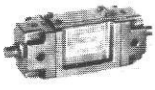

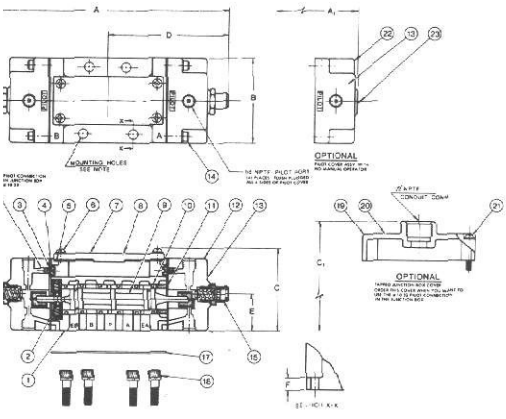

MENSIONS

lve Size	A	A_1	B	C	C_1	D	E	F
SA 4224	6.54 (166)	5.43 (138)	2.13 (54)	2.36 (60)	3.27 (83)	3.23 (82)	1.06 (27)	0.35 (9)
SA 4234	7.20 (183)	6.10 (155)	2.52 (64)	2.44 (62)	3.31 (84)	3.58 (91)	1.06 (27)	0.39 (10)
SA 4244	8.90 (226)	7.40 (188)	2.83 (72)	2.99 (76)	3.86 (98)	4.29 (109)	1.22 (31)	0.47 (12)

Millimeters in Parentheses

PARTS LIST

Det. No.	No. Req'd.	Part Name	NVSA 4224	NVSA 4234	NVSA 4244
1	1	Valve Body			
2	1	Detent assembly	DA0201	DA0201	DA0401
3A	2	#10-32 plug and gasket	NXT015-3/4	NXT015-3/4	NXT015-3/4
3B	2	#10-32 to 1/16" I.D. tube barb	211-1	211-1	211-1
4A	1	Gasket—pilot cover—"A" end	XT024-3A	XT027-3	XT029-3
4B	1	Gasket—pilot cover—"B" end	XT024-3B	XT027-3	XT029-3
5	1	Gasket—junction box cover	NXT010-9	XT013-12-2	NXT030-19
6	4	Captive screw—blank junction box cover	NXT010-11	NXT010-11	NXT010-11
7	1	Blank junction box cover assembly. Consists of detail 8 and (4) detail 6			
8	1	Blank junction box cover			
9	1	Sleeve assembly—			
10	6	O-ring—sleeve	ARP568-018	ARP568-018	ARP568-119
11	1	Spacer	AXT339-5-1B	AXT340-5-1A	XT029-6
12	2	Pilot cover assembly with manual operator but no junction box pilot connection. Consists of detail 13A, 3B, 15, (4) detail 14, and (4) 1/8" NPTF flush plugs.			
12A	2	Pilot cover assembly with manual operator but no junction box pilot connections. Consists of detail 15, (4) detail 14, (3) 1/8" NPTF flush plugs, and either detail 13C or details 13A and 3A.			
12C	1	Pilot cover assembly—"B" end—with manual operator and junction box pilot connection. Consists of detail 13B, 15, (4) detail 14, and (4) 1/8" NPTF flush plugs.			
13A	2	Pilot cover with #10-32 junction box pilot connection.	NXT015-1	NXT025-1	NXT035-1
13B	2	Pilot cover with 1/16" tube barb permanently bonded in cover for junction box pilot connection.	NXT015-1C		
13C	2	Pilot cover without junction box pilot connection	NXT015B	NXT025-1B	NXT035-1B
14	8	Captive screw-Pilot cover	XT012-25B	XT012-25B	XT012-25B
15	2	Recessed non-locking operator assembly with O-ring seal	PB0102	PB0102	PB0402
17	1	Gasket—valve body to sub-plate	NXT010-14	XT016-3	XT021-9
18	4**	Hold-down bolt and lockwasher	NXT010-16 (10-24x3/4")	NXT020-14 (1/4-20x3/4")	NXT030-13 (1/4-20x1")
19	1	Tapped junction box cover assembly. Consists of detail 20 and (4) detail 21			
20	1	Tapped junction box cover			
21	4	Captive screw—tapped junction box cover	XT066-7	XT066-7	NXT013-3
22	2	Pilot cover assembly with no operator but with junction box pilot connection. Consists of details 13A, 3B, 23, (4) detail 14 and (4) 1/8" NPTF flush plugs.			
22A	1	Pilot cover assembly with no operator but with junction box pilot connection. Consists of details 13B, 23, (4) detail 14 and (4) 1/8" NPTF flush plugs.			
22B	2	Pilot cover assembly with no operator and with no junction box pilot connection. Consists of detail 13C, 23, (4) detail 14 and (3) 1/8" NPTF flush plugs.			
23	2	Plug for operator mounting hole	B2301-1/4	B2301-1/4	B2301-1/4

*NVSA 4224 valves use only one of these on the "A" end of valve **NVSA 4224 valves require only three hold-down bolts

NVSA 4324 NVSA 4424
4334 4434
4444 4444

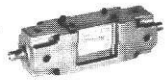

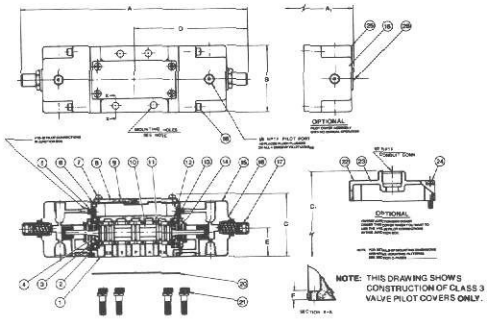

PARTS LIST

Det. No.	No. Req'd.	Part Name	NVSA 4324	NVSA 4334	NVSA 4344	NVSA 4424	NVSA 4434	NVSA 4444
1	1	Valve Body						
2	2	*O-ring—pilot passage*	B2401.P3	B2401.P3	B2401.P3	B2401.P3	B2401.P3	B2401.P3
3	2	O-ring—pilot cover	B2401.P22.A	B2401.P22.A	B2401.P21	B2401.P22.4	B2401.P22A	B2401.P21
4	2	Spring seat	AXT066-8-1	AXT066-8-1	AZ653-3	AXT066-8-1	AXT066-8-1	AZ653-3
5A	2	#10-32 plug and gasket	NXT015-3/4	NXT015-3/4	NXT015-3/4	NXT015-3/4	NXT015-3/4	NXT015-3/4
5B	2	#10-32 to 1/16" I.D. Tube barb	211-1	211-1	211-1	211-1	211-1	211-1
6	1	Gasket—junction box cover	NXT010-9	XT013-12	NXT030-19	NXT010-9	XT013-12	NXT030-19
7	4	Captive Screw—blank junction box cover	NXT010-11	NXT010-11	NXT010-11	NXT010-11	NXT010-11	NXT010-11
8	1	Blank junction box cover assembly. Consists of detail 9 and (4) detail 7.						
9	1	Blank junction box cover						
10	1	*Sleeve assembly—*						
11	6	O-ring—sleeve	ARP568-018	ARP568-018	ARP568-119	ARP568-018	ARP568-018	ARP568-119
12	1	Spacer "A" End	AXT066-9-1	AXT066-9	AZ653-2-1	AXT066-9-1	AXT066-9	AZ653-2-1
12A	1	Spacer "B" End	AXT066-9-2	AXT066-9	AZ653-2-2	AXT066-9-2	AXT066-9	AZ653-2-2
13	2	*O-ring—spacer*	AS568-022	B2401.P24	ARP568-120	AS568-022	B2401.P24	ARP568-120
14	2	Spring—spool centering	AXT066-6-1	AXT066-6-1	AZ653-4	AXT066-6-1	AXT066-6-1	AZ653-4
15	2	Pilot cover assembly with operator and with junction box pilot connection. Consists of details 16, 17, 5B, (4) detail 18 and (4) 1/8" NPTF flush plugs.						
15A	2	*Pilot cover assembly with operator but without junction box pilot connection. Consists of details 16A, 17, (4) detail 18 and (3) 1/8" NPTF flush plugs.*						
16	2	Pilot cover with #10-32 junction box pilot connection						
16A	2	Pilot cover without junction box pilot connection						
17	2	Recessed non-locking operator with O-ring seal	PB0302	PB0302	PB0402	PB0302	PB0302	PB0402
18	8	Captive screw—pilot cover	XT012-25B	XT012-25B	XT012-25B	XT012-25B	XT012-25B	XT012-25B
20	1	Gasket—valve body to sub-plate	NXT010-14	XT016-3	XT021-9	NXT010-14	XT016-3	XT021-9
21	4**	Hold-down bolt and lockwasher	NXT010-16	NXT020-14	NXT030-13	NXT010-16	NXT020-14	NXT030-13
22	1	Tapped junction box cover assembly. Consists of detail 23 and (4) detail 24						
23	1	*Tapped junction box cover*						
24	4	Captive Screw—tapped junction box cover	XT066-7	XT066-7	NXT013-3	XT066-7	XT066-7	XT013-3
25	2	Pilot cover assembly without operator but with junction box pilot connection. Consists of details 16, 26, 5B, (4) detail 18 and (4) 1/8" NPTF flush plugs.						
25A	2	*Pilot cover assembly without operator and without junction box pilot connection. Consists of details 16A, 26, (4) detail 18 and (3) 1/8" NPTF flush plugs.*						
26	2	Plug for operator mounting hole	B2301-1/4	B2301-1/4	B2301-1/4	B2301-1/4	B2301-1/4	B2301-1/4

*NVSA 4324/4424—Use 1 only on "A" End. Use AXT066-8-2 on "B" End. **NVSA 4324 models only require three hold-down bolts.

DIMENSIONS

Valve Size	A	A_1	B	C	C_1	D	E	F
NVSA 4324 4424	8.26 (210)	6.77 (172)	2.13 (54)	2.36 (60)	3.27 (83)	3.23 (82)	1.06 (27)	0.35 (9)
NVSA 4334 4434	8.82 (224)	7.32 (186)	2.52 (64)	2.44 (62)	3.31 (84)	3.58 (91)	1.06 (27)	0.39 (10)
NVSA 4344 4444	11.65 (296)	9.84 (250)	2.83 (72)	2.99 (76)	3.86 (98)	4.29 (109)	1.22 (31)	0.47 (12)

Millimeters in Parentheses

NVSA 4524
4534
4544

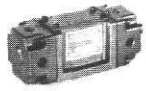

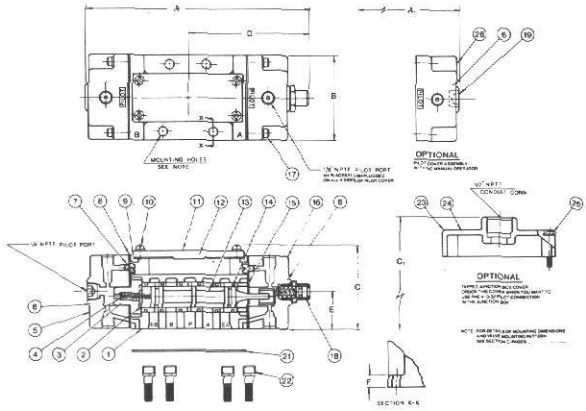

PARTS LIST

Det. No.	No. Req'd.	Part Name	NVSA 4524	NVSA 4534	NVSA 4544
1	1	Valve Body			
2	1	Bumper—"B" end	AXT340-10-2	AXT340-10-2	XT021-14
3	1	Spring seat	NXT015-2	NXT025-2	NXT035-2
4	1	Spring—spool return	*XT010-15*	*XT010-15*	*XT021-13A*
5A	1	Pilot cover assembly—"B" end with junction box pilot connection but no operator. Consists of details 6, 7B, 19, (4) detail 17 and (4) 1/8" NPTF flush plugs			
5B	1	Pilot cover assembly—"B" end with junction box pilot connection but no operator. Consists of details 6A, 19, (4) detail 17, and (4) 1/8" NPTF flush plugs			
5C	1	Pilot cover asembly—"B" end. No operator—No junction box pilot connection. Consists of details 6B, 19, (4) detail 17 and (3) 1/8" NPTF flush plugs.			
6	2	Pilot cover with #10-32 junction box pilot connection.			
6A	1	Pilot cover with 1/16" tube barb permanently bonded in cover for junction box pilot connection.			
6B	2	Pilot cover without junction box pilot connection			
7A	2	#10-32 plug and gasket	NXT015-3/4	NXT015-3/4	NXT015-3/4
7B	2	#10-32 to 1/16" I.D. tube barb with gasket	211-1	211-1	211-1
8A	1	Gasket—pilot cover—"A" end	*XT024-3A*	*XT027-3*	*XT029-3*
8B	1	Gasket—pilot cover—"B" end	XT024-3B	XT027-3	XT029-3
9	1	Gasket—Junction box cover	NXT010-9	XT013-12-2	NXT030-19
10	4	Captive screw—blank junction box cover	NXT010-11	NXT010-11	NXT010-11
11	1	Blank junction box cover assembly. Consists of detail 12 and (4) detail 10.			
12	1	Blank junction box cover			
13	1	Sleeve assembly—			
14	6	O-ring—sleeve	ARP568-018	ARP568-018	ARP568-119
15	1	Spacer	AXT339-5-1B	AXT340-5-1A	XT029-6
16	1	Pilot cover assembly—"A" end with operator and junction box pilot connection. Consists of details 6, 7B, 18, (4) detail 17 and (4) 1/8" NPTF flush plugs.			
16A	1	Pilot cover assembly—"A" end with operator and without junction box pilot connection. Consists of details 6B, 18, (4) detail 17 and (3) 1/8" NPTF flush plugs.			
17	8	Captive screw—pilot cover	XT012-25B	XT012-25B	XT012-25B
19	1	Plug for operator mounting hole	B2301-1/4	B2301-1/4	B2301-1/4
21	1	Gasket—valve body to sub-plate	NXT010-14	XT016-3	XT021-9
22	4*	Hold-down bolt and lockwasher	NXT010-16 (10-24x3/4")	NXT020-14 (1/4-20x3/4")	NXT-030-13 (1/4-20x1")
23	1	Tapped junction box cover assembly. Consists of detail 24 and (4) detail 25			
24	1	Tapped junction box cover			
25	4	Captive screw—tapped junction box cover	XT066-7	XT066-7	NXT013-3
26	1	Pilot cover assembly "A" end without operator and without junction box pilot connection. Consists of details 6B, 19, (4) detail 17 and (3) 1/8" NPTF flush plugs.			
26A	1	Pilot cover assembly—"A" end without operator but with junction box pilot connection. Consists of details 6, 19, (4) detail 17 and (4) 1/8" NPTF flush plugs.			

*NVSA 4524 models require only three hold-down bolts.

DIMENSIONS

Valve Size	A	A_1	B	C	C_1	D	E	F
NVSA 4524	5.98 (152)	5.43 (138)	2.13 (54)	2.36 (60)	3.27 (83)	3.23 (82)	1.06 (27)	0.35 (9)
NVSA 4534	6.65 (169)	6.10 (155)	2.52 (64)	2.44 (62)	3.31 (84)	3.58 (91)	1.06 (27)	0.39 (10)
NVSA 4544	8.15 (207)	7.40 (188)	2.83 (72)	2.99 (76)	3.86 (98)	4.29 (109)	1.22 (31)	0.47 (12)

Millimeters in Parentheses

ERIES
VSA 4◯24, 4◯34
VSA 4◯44

VSA 4◯24

neral:

b-plates are heavy duty aluminum die castings. All ports are rked with identification in accordance with American National ndards Institute standard ANSI B93.9-1969 "Symbols for Mark- Electrical Leads and Ports on Fluid Power Valves."

ndard sub-plates do not provide for pilot pressure connections ough the sub-plate.

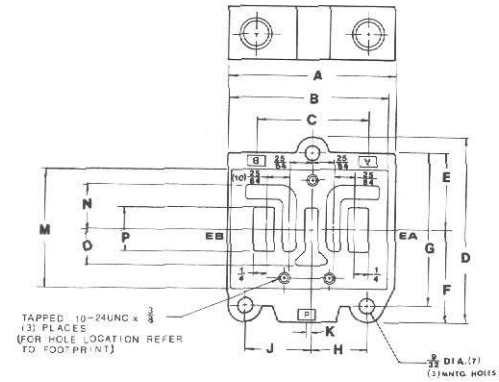

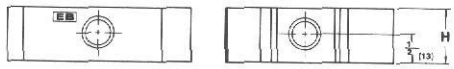

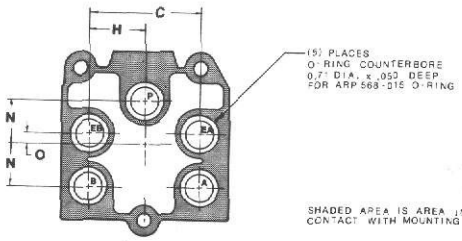

VALVE MOUNTING DIMENSIONS

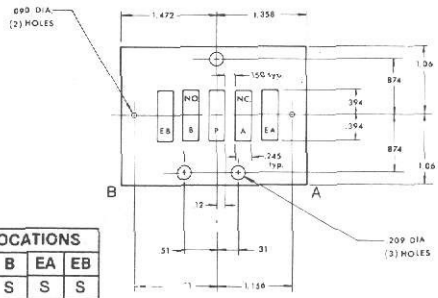

SUB-PLATE MODEL NO.	$N_{P_{T_F}}$	PORT LOCATIONS				
		P	A	B	EA	EB
SP0201	1/4	S	S	S	S	S
SP0202	3/8	S	S	S	S	S
SP0203	1/4	B	B	B	B	B
SP0206	1/4	S/B	B	B	B	B
SPA0201	1/4	S	S	S	S	S
SPA0202	3/8	S	S	S	S	S

= SIDE
= BOTTOM S/B = SIDE & BOTTOM

DIMENSIONS

A	B	C	D	E	F	G	H	J	K	M	N	O
3.03	2.88	2.00	3.31	1.38	1.65	2.76	0.98	1.18	0.08	2.13	0.79	0.63
(77)	(73)	(51)	(84)	(35)	(42)	(70)	(25)	(30)	(2)	(54)	(20)	(16)

Millimeters in Parentheses

VSA 4◯34

eneral:

ıb-plates are heavy duty aluminum die castings. All ports are arked with identification in accordance with American National andards Institute standard ANSI B93.9-1969 "Symbols for Mark- g Electrical Leads and Ports on Fluid Power Valves."

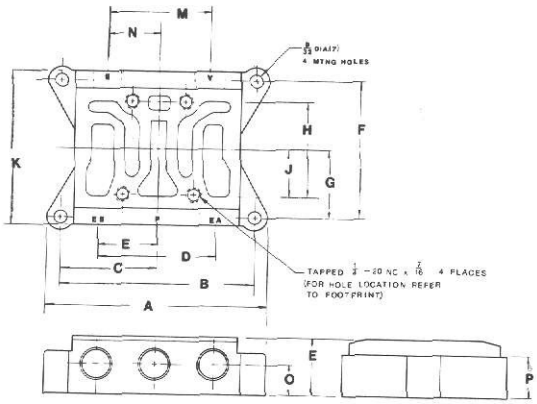

VALVE MOUNTING DIMENSIONS

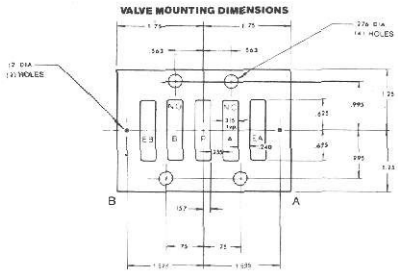

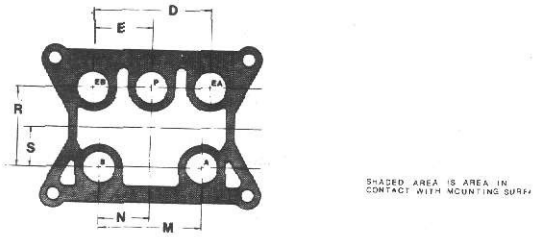

SUB-PLATE MODEL NO.	$N_{P_{T_F}}$	PORT LOCATIONS				
		P	A	B	EA	EB
SP0301	3/8	S	S	S	S	S
SP0302	1/2	S	S	S	S	S
SP0303	3/8	S/B	S/B	S/B	S/B	S/B
SPA0302	1/2	S	S	S	S	S

S = SIDE
B = BOTTOM S/B = SIDE & BOTTOM

DIMENSIONS

A	B	C	D	E	F	G	H	J	K	M	N	O	P	R	S
4.72	40.9	2.05	2.52	12.6	2.91	1.46	2.05	1.02	3.31	2.20	1.10	0.67	0.94	1.73	0.87
(120)	(104)	(52)	(64)	(32)	(74)	(37)	(52)	(25)	(84)	(56)	(28)	(17)	(24)	(44)	(22)

Millimeters in Parentheses

NVSA 4◯44

General:

Sub-plates are heavy duty aluminum die castings. All ports are marked with identification in accordance with American National Standards Institute standard B93.9-1969 "Symbols for Marking Electrical Leads and Ports on Fluid Power Valves."

Pilot Connections in Sub-Plate:

All models have two 1/8" NPTF pilot ports in the ends of the sub-plate which interconnect with pilot passages in the mounting surface of NVSA valves.

Refer SP0403, 0404. All side and bottom port sub-plates are shipped with (5) loose socket head flush pipe plugs to plug the unused ports.

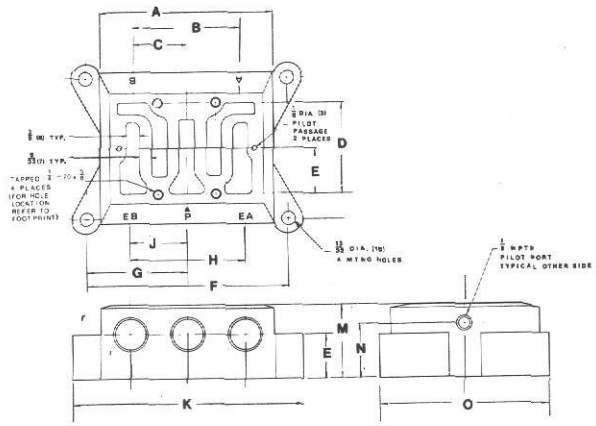

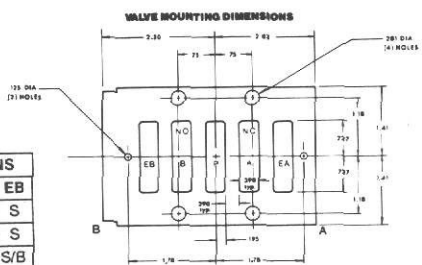

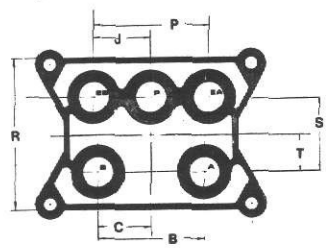

FOOTPRINT
SHADED AREA IS AREA IN CONTACT WITH MOUNTING SURFACE

SUB-PLATE MODEL NO.	N_P T_F	PORT LOCATIONS				
		P	A	B	EA	EB
SP0401	1/2	S	S	S	S	S
SP0402	3/4	S	S	S	S	S
SP0403	1/2	S/B	S/B	S/B	S/B	S/B
SP0404	3/4	S/B	S/B	S/B	S/B	S/B

S = SIDE
B = BOTTOM S/B = SIDE & BOTTOM

DIMENSIONS

A	B	C	D	E	F	G	H	J	K	M	N	O	P	R	S	T
4.49	2.76	1.38	2.36	1.18	5.24	2.64	2.99	1.50	5.98	2.01	1.50	4.37	2.99	3.06	2.01	0.98
(114)	(70)	(35)	(60)	(30)	(133)	(67)	(76)	(38)	(152)	(51)	(38)	(111)	(76)	(53)	(51)	(25)

Millimeters in Parentheses

NVSA 4◯44 (1")

General:

Sub-plates are heavy duty aluminum die castings. All ports are marked with identification in accordance with American National Standards Institute standard B93.9-1969 "Symbols for Marking Electrical Leads and Ports on Fluid Power Valves."

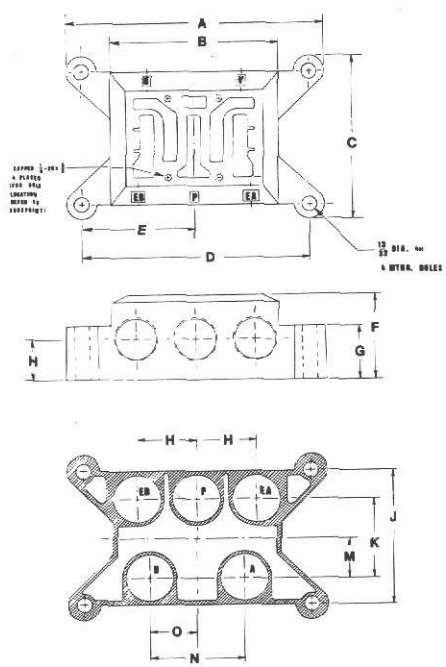

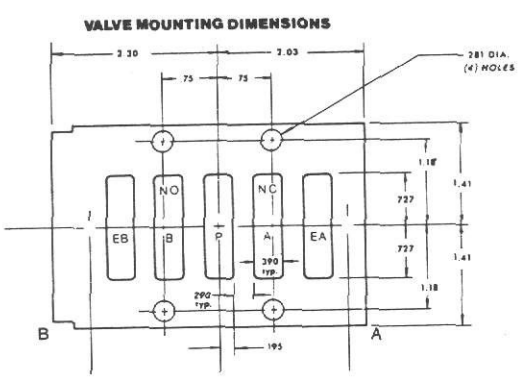

SUB-PLATES MODEL NO.	N_P T_F	PORT LOCATIONS				
		P	A	B	EA	EB
SP0502	1	S	S	S	S	S

S = SIDE

DIMENSIONS

A	B	C	D	E	F	G	H	J	K	M	N	O
7.56	4.88	0.48	6.61	3.31	2.48	1.57	1.18	3.94	2.36	1.18	2.76	1.38
(192)	(124)	(123)	(168)	(84)	(63)	(40)	(30)	(100)	(60)	(30)	(70)	(35)

Millimeters in Parentheses

DIRECTIONAL AIR VALVE
INTERFACE SPEED CONTROL PORT RELOCATION BLOCK

GENERAL
This Speed Control is an Aluminum die cast Interface Plate having on its upper surface a mounting pattern which accepts SMC NVS 4024 or NVS 4034 solenoid operated valves and with a lower surface which mounts onto all subplates and manifolds applicable to these valves.

INSTALLATION
This Speed Control is mounted between the subplate/manifold and the valve by utilizing longer bolts in place of the standard valve Hold Down bolts. May be field installed without system or piping modifications.

NVSA4024

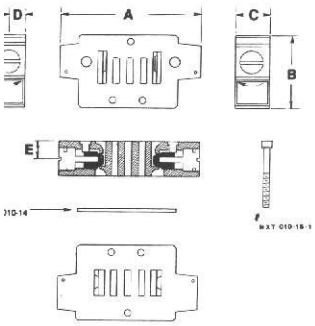

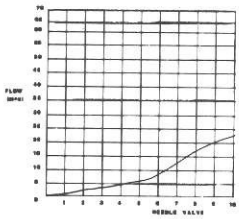

TO ORDER FOR FIELD REPLACEMENT

Kit Number	Comprising
SP 0200	1 — # AXT 394 Speed Control Block 1 — # NXT 010-14 Gasket 3 — # NXT 010-16-1 Hold Down Bolts (10-24 x 1¾")

TO ORDER AS PART OF VALVE/MANIFOLD ASS'Y
ADD Suffix "M" to part number.
Example: Part # NVS4124-0209DM-A#NVS 4124-00090 mounted on a #SP0202 subplate with A#SP0200 Interface speed control between.

DIMENSIONS

A	B	C	D	E
4.01 (102)	2.13 (54)	0.98 (25)	0.47 (12)	0.31 (8)

Millimeters in Parentheses

Optional
SPA0200 Interface speed control w/crossover pilot holes to connect with sub-plate.

FEATURES
1. Eliminates expense of "External" Flow Controls and necessary piping.
2. Simplifies installation by eliminating piping.
3. Provides for "Bleed-Out" flow adjustments from Zero to 90% of valves Full Flow capacity.
4. Improves system appearance.

OPERATION
Cylinder speeds may be independently controlled by adjustment of the needle valves in the "EA" & "EB" ports of the speed control block. These needle valves control flows of exhaust air from the valve and are "Vibrationproof" and of "Non-Rising" design.

NVSA4034

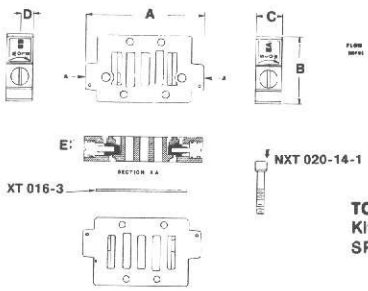

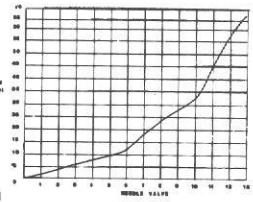

TO ORDER FOR FIELD REPLACEMENT

Kit Number	
SP 0300	1 — # AXT 393 Speed Control Block 1 — # XT 016-3 Gasket 4 — # NXT 020-14-1 Hold Down Bolts (# ¼-20-x1¼")

TO ORDER AS PART OF VALVE/MANIFOLD ASS'Y
ADD Suffix "M" to part number.
Example: Part Number # NVS 4134-0209DM = A # NVS 4134-0009D valve mounted on # SP 0302 subplate with a# SP 0300 Interface Speed Control between.

DIMENSIONS

A	B	C	D	E
4.41 (112)	2.68 (68)	0.98 (25)	0.47 (12)	0.31 (8)

Millimeters in Parentheses

Optional
SPA0300 Interface speed control w/crossover pilot holes to connect with sub-plate.

PORT RELOCATION BLOCK

A cylinder port relocation block is an aluminum die cast sandwich plate which mounts between the valve unit and the sub-plate.

Provides two sets of cylinder ports emerging at right angles to the supply port (out over the ends of the valve.)

A useful accessory can be used to ease piping problems in those tight places where there is simply no room for piping out the normal cylinder ports in the sub-plate.

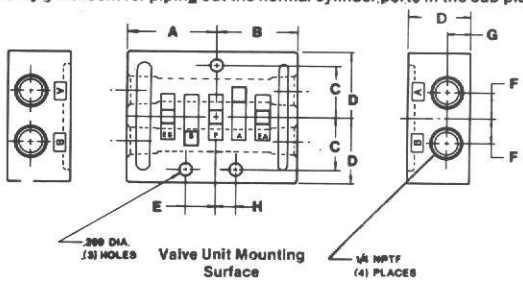

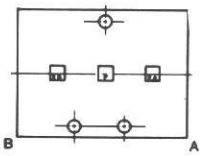

Foot Print of Port Relocation Block Mounting Surface

ORDERING PART NO. SP 0205
(1/4" NPTF PORTS)

INCLUDES
1 Block XT 015-2
3 Soc Hd Screws NXT 010-19A (10-24X1¾")
1 Gasket NXT 010-14
2 Flush Plugs 1/4" NPT

DIMENSIONS

A	B	C	D	E	F	G	H
1.47 (37)	1.36 (34.5)	0.874 (22.2)	1.10 (27.9)	0.51 (12.9)	0.433 (10.9)	0.42 (10.7)	0.31 (7.9)

Millimeters in Parentheses

It also provides additional cylinder ports for those situations where the valve serves more than one cylinder, or where pressure indicators must be mounted in the on-going cylinder lines.

Note: Each cylinder port relocation block is shipped complete with the necessary extra-long hold-down bolts, one sub-plate gasket, and two flush pipe plugs to plug the unused cylinder ports in the block.

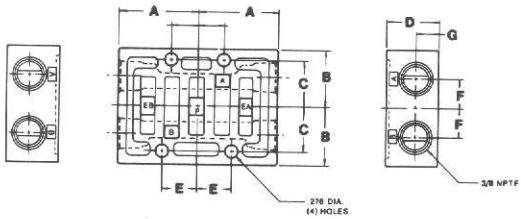

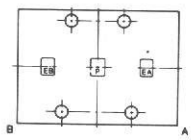

Foot Print of Port Relocation Block Mounting Surface

ORDERING PART NO. SP 0304
(3/8" NPTF PORTS)

INCLUDES
1—Block XT 016-2
4—Soc Hd Screws NXT 020-10 (1/4-20x2")
2—Flush Plugs 3/8" NPT

DIMENSIONS

A	B	C	D	E	F	G	H
1.75 (44.4)	1.25 (31.7)	0.995 (25.3)	1.14 (28.9)	0.75 (19.1)	0.63 (16.0)	0.47 (1.19)	0.56 (14.2)

Millimeters in Parentheses

GENERAL

In addition to mounting on individual subplates, All SMC NVSA 4024 & 4034 Valves may be "Close-Mounted" on "Stacking" manifold assemblies. If required, Solenoid, Solenoid/Pilot Operated and Air piloted valves may be intermixed, without modification, on any given valve manifold. This arrangement greatly reduces space requirements and simplifies piping layouts. A common Pressure Gallery (P) and two common Exhaust Galleries (EA & EB) interconnect with the pressure and exhaust ports of all the valves within the assembly. Pressure and Exhaust service connections are located at either end of the manifold. Pilot Air ports (PA & PB) are also standard on all manifold blocks to allow Air Piloted valves, mounted on the manifold, to be operated by means of pilot air supplied through the manifold's pilot air supply ports.

CONSTRUCTION

Each of the manifold blocks and the manifold End Plates are affixed to its adjacent block by a unique pair of "V" Clamp Plates *held together by two bolts and nuts. Additional blocks may be added* to an existing manifold assembly, without modification of the assembly or having to disturb the piping other than the Pressure and Exhaust service connections.

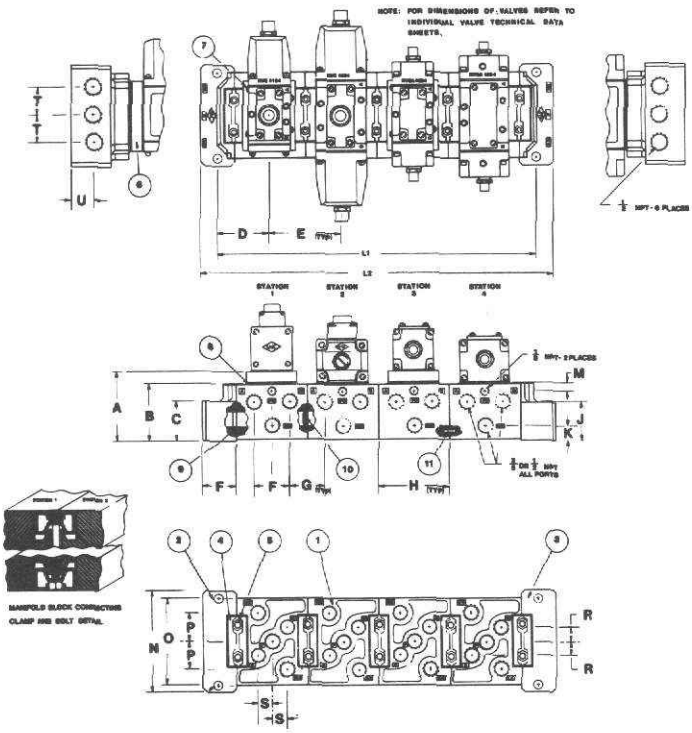

Manifold Dimensions

No. of Stations	L_1	L_2
2	8.82 (224)	10.55 (268)
3	12.36 (314)	14.09 (358)
4	15.91 (404)	17.64 (448)
5	19.45 (494)	21.18 (538)
6	22.99 (584)	24.72 (628)
7	26.54 (674)	28.27 (718)
8	30.08 (764)	31.81 (808)

Millimeters in Parentheses

More than 8 stations, contact factory.

TO SPECIFY "FACTORY BUILT" VALVE/MANIFOLD ASSEMBLY

1. Establish the number of stations required.
2. Select the type and size of valve required at each station.
3. Choose Manifold Block porting desired.
4. To specify a Valve mounted on a manifold block—Insert manifold block number into valve number, e.g. #NVSA4124-2109D is a NVSA4124-0009D valve mounted on a #21 Manifold Block.

TO ORDER "FACTORY BUILT" VALVE/MANIFOLD ASSEMBLY

Example 1 pce. Five Station Manifold Ass'y comprising: -
Station 1. NVS 4124-2109D
Station 2. NVS 4234-3109D
Station 3. NVS 4434-31090
Station 4. NVSA 4124-41N
(3) Blocking discs in P, EA & EB galleries
Station 5. NVSA 4234-38N
1 Pc. ME 403LR—5 Assembly Kit.

TO ORDER INDIVIDUAL COMPONENTS:

Ref. No.	Part No.	Pcs. Req.	Description
1A	MB 4020-03	—	#21 Manifold Block
1B	MB 4020-04	—	#41 Manifold Block
1C	MB 4021-03	—	#23 Manifold Block
1D	MB 4222-03	—	#28 Manifold Block

Note: Use for mounting NVS 4024 valves. (Includes (1) Ref 6, (4) Ref 7, (1) Ref 8).

1E	MB 4030-03	—	#31 Manifold Block
1F	MB 4030-04	—	#51 Manifold Block
1G	MB 4031-03	—	#33 Manifold Block
1H	MB 4232-03	—	#38 Manifold Block

Note: Use for mounting NVS 4034 valves.

Note: All above Manifold Blocks include (2) Ref. 4, (2) Ref. 5, and (3) Ref. 9.

Ref. No.	Part No.	Qty.	Description
2 & 3	ME 403 LR	1	Right & Left End Blocks. Incl. (2) Ref. 4, (2) Ref. 5 and (3) Ref. 9.
4	AXT 228-3	2	Top or Bottom "V" Clamp Plates.
5	M6 x 60	2	Bolt and nut for "V" Clamp Plates.
6	MA 403-2	—	4024 to 4034 mounting. Adaptor Plate.
7	NXT 020-14A	4	Bolts, Adaptor Plate. 1/4-20x5/8.
8	NXT 016-3-1	1	Gasket, Adaptor Plate.
9	P 20	3	O Ring, Manifold Block galleries.
10	AXT 228-4A	—	Blocking Disc. Gallery.
11	NXT 010-17-4	2	Pin, Manifold Block alignment. Necessary for assemblies over four (4) valves.

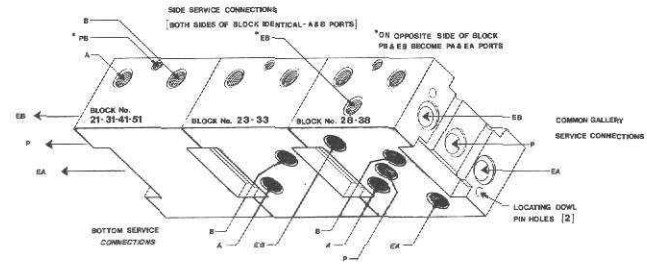

DIMENSIONS

A	B	C	D	E	F	G	H	J	K	M	N	O	P	R	S	T	U
3.43 (87)	2.83 (72)	1.89 (48)	2.64 (67)	3.54 (90)	1.73 (44)	1.81 (46)	3.54 (90)	1.97 (50)	0.79 (20)	0.35 (9)	5.12 (130)	4.33 (110)	1.38 (35)	0.67 (17)	0.71 (18)	1.34 (34)	1.18 (30)

Millimeters in Parentheses

OLENOID AND AIR PILOTS CAN BE INTERCHANGED

ue to the modular design of the Series NVS/NVSA 4024 through 4044 valves, interchanging solenoids and air pilot operators on either the \" or "B" ends of the valves is possible.

is allows electrical operation of the valve in one direction and air pilot for the return. Contact the factory for further information.

ASIC CONSTRUCTION

MC air pilot operated valves use the same basic body, spool and leeve, and internal parts as the SMC solenoid valves. The end nds of the spool form their own pilot piston, allowing pilot air to ct upon the end of the spool directly, and avoiding the need for ny elastomer seals.

ll Captive (Metric) Fasteners

ll fasteners which hold the valve assembly together are standard etric fasteners, captive in their respective parts, to avoid loss uring assembly and/or dis-assembly. Only the hold-down bolts e not captive, to allow the use of hold-down bolts appropriate to e sub-plate being used. (Most of these valves are interhangeable with competitive valves on the competitive subates.)

These valves were designed to co-operate with air logic, and every effort has been made to maximize performance when used in conjunction with air logic.

Patented* Spool and Sleeve

*US Patent No. 3952775

The SMC patented spool and sleeve make an ideal valving action to co-operate with air logic. The lack of elastomer seals provides a uniform response from cycle to cycle with actuation occurring at a constant pilot pressure regardless of the pressures within the valve passages.

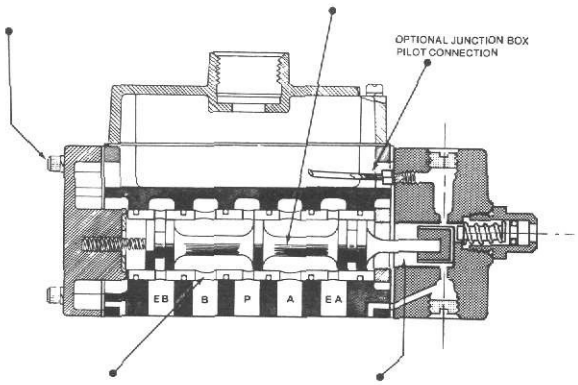

tented* Differential Sleeve Porting

S Patent No. 3952775

ovides a short stroke which minimizes spool hammer and protes long bumper life.

Pilot volumes have been held to a practical minimum. This, coupled with the extremely short spool stroke and low pilot pressure required for actuation, provides remarkably fast response to the incoming pilot signal.

VSA 4524, 4534, 4544
ouble Pilot Spring Offset

here to Use It:

pplication #1 — To increase spool and sleeve response.

andard moving part logic output pressure is 50 PSIG (3.44 Bar). hen pilot pressure builds up in the "A" pilot chamber, the spool ifts fully at about 10 PSIG (0.69 Bar). This produces a very fast sponse. After the valve has shifted, the pressure in the "A" pilot ilds up to the full 50 PSIG.

hen the logic system exhausts the "A" pilot, the pressure in the \" pilot chamber must decay from 50 PSIG all the way down to low 10 PSIG before the spring can return the spool, a timensuming process.

If, at the same time the "A" pilot is exhausted, the "B" pilot is pressurized, then as the pressure in "A" pilot decays, the pressure in the "B" pilot builds up. When the pressure in the "B" pilot is within 10 PSI of that in the "A" pilot, the spring returns the spool. This action significantly reduces the time required to return the valve spool to the initial position.

Application #2 — To prevent shifting of the spool by pressurizing the "B" pilot.

If the "B" pilot is pressurized, pressurizing the "A" pilot has no effect. The spool does not shift. Thus, it is possible to interlock the action of the valve by pressurizing the "B" pilot to prevent the "A" pilot from actuating the valve.

PILOT OPTIONS AND FEATURES

Junction Box Pilot Connections

All sub-plate mounted models offer an optional set of #10-32 pilot ports within the junction box in the top of the valve body, and a large tapped junction box cover, which allows pilot tubing to be run into the valve through electrical conduit, Sealtite, or air hose as wires are run into the electrical valves. Push-on barbs for 1/16" I.D. pilot tubing are supplied installed in the pilot covers.

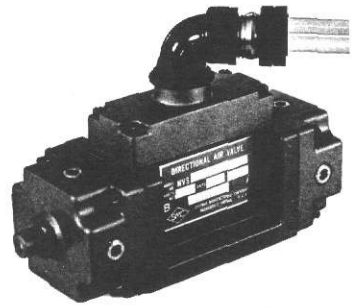

Multiple External Pilot Ports

All models carry four external pilot ports in the four sides of the pilot cap. These ports may be used or plugged, as desired. One popular use is to install a pressure indicator in one port to show whether pilot pressure is applied, similar to the function of electrical pilot lights on the solenoid valves.

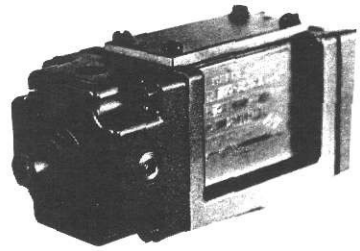

Manual Operators

All models offer an optional recessed non-locking operator. This is a dust-tight splash-proof, air-tight unit which pushes directly on the end of the spool bumper to move the main spool directly. Because the operator is sealed and air-tight, the pilot pressure acts upon the inner end of the operator stem as though it were a piston, and in troubleshooting, you can press gently on the operator and tell whether there is pressure in that pilot chamber. All operators have their own return springs, and do not interfere with normal spool action when they are not in use.

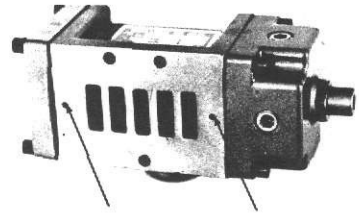

Internal Pilot Ports in Gasket Face

All bodies provide internal 2 mm. pilot passages drilled out of the mounting face of the body, for use on sub-plates which provide pilot connections in the sub-plate.

PILOT INDICATORS

These brass plugs when placed into the 1/8" Pilot Ports of an "A" or "B" style NVSA allow you to know if and when pressure is in the pilot cavity. You have an option of either a red or green rising pin on your indicator.

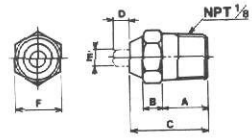

HOW TO ORDER

PART NO.	SUFFIX NO.	DESCRIPTION
VR 3110-01R	V1	Red "Pop Up" Indicator 1/8" NPTF
VR 3110-01G	V2	Green "Pop Up" Indicator 1/8" NPTF

Example: NVSA 4124-52A V2

DIMENSIONS

A	B	C	D	E	F
0.39 (10)	0.16 (4)	0.67 (17)	0.12 (3)	0.14 (3.5)	0.39 (10)

Millimeters in Parentheses

World Wide SMC Support...

North American Branch Offices For a branch office near you call: 1-800-SMC-SMC1 (762-7621)

SMC Pneumatics Inc. (Atlanta)
1440 Lakes Parkway, Suite 600
Lawrenceville, GA 30043
Tel: (770) 624-1940
FAX: (770) 624-1943

SMC Pneumatics Inc. (Austin)
2324-D Ridgepoint Drive
Austin, TX 78754
Tel: (512) 926-2646
FAX: (512) 926-7055

SMC Pneumatics Inc. (Boston)
Zero Centennial Drive
Peabody, MA 01960
Tel: (978) 326-3600
Fax: (978) 326-3700

SMC Pneumatics Inc. (Charlotte)
5029-B West W.T. Harris Blvd.
Charlotte, NC 28269
Tel: (704) 597-9292
FAX: (704) 596-9561

SMC Pneumatics Inc. (Chicago)
27725 Diehl Road
Warrenville, IL 60555
Tel: (630) 393-0080
FAX: (630) 393-0084

SMC Pneumatics Inc. (Cincinnati)
4598 Olympic Blvd.
Erlanger, KY 41018
Tel: (606) 647-5600
FAX: (606) 647-5609

SMC Pneumatics Inc. (Cleveland)
2305 East Aurora Rd., Unit A-3
Twinsburg, OH 44087
Tel: (330) 963-2727
FAX: (330) 963-2730

SMC Pneumatics Inc. (Columbus)
3687 Corporate Drive
Columbus, OH 43231
Tel: (614) 895-9765
FAX: (614) 895-9780

SMC Pneumatics Inc. (Dallas)
12801 N. Stemmons Frwy, Ste. 815
Dallas, TX 75234
Tel: (972) 406-0082
FAX: (972) 406-9904

SMC Pneumatics Inc. (Detroit)
2990 Technology Drive
Rochester Hills, MI 48309
Tel: (248) 299-0202
FAX: (248) 293-3333

SMC Pneumatics Inc. (Houston)
9001 Jameel, Suite 180
Houston, TX 77040
Tel: (713) 460-0762
FAX: (713) 460-1510

SMC Pneumatics Inc. (L.A.)
14191 Myford Road
Tustin, CA 92780
Tel: (714) 669-1701
FAX: (714) 669-1715

SMC Pneumatics Inc. (Milwaukee)
16850 W. Victor Road
New Berlin, WI 53151
Tel: (414) 827-0080
FAX: (414) 827-0092

SMC Pneumatics Inc. (Mnpls.)
990 Lone Oak Road, Suite 162
Eagan, MN 55121
Tel: (651) 688-3490
FAX: (651) 688-9013

SMC Pneumatics Inc. (Nashville)
5000 Linbar Drive, Suite 297
Nashville, TN 37211
Tel: (615) 331-0020
FAX: (615) 331-9950

SMC Pneumatics Inc. (Newark)
3434 US Hwy. 22 West, Ste. 110
Somerville, NJ 08876
Tel: (908) 253-3241
FAX: (908) 253-3452

SMC Pneumatics Inc. (Phoenix)
2001 W. Melinda Lane
Phoenix, AZ 85027
Tel: (623) 492-0908
FAX: (623) 492-9493

SMC Pneumatics Inc. (Portland)
14107 N.E. Airport Way
Portland, OR 97230
Tel: (503) 252-9299
FAX: (503) 252-9253

SMC Pneumatics Inc. (Richmond)
5377 Glen Alden Drive
Richmond, VA 23231
Tel: (804) 222-2762
FAX: (804) 222-5221

SMC Pneumatics Inc. (Rochester)
245 Summit Point Drive
Henrietta, NY 14467
Tel: (716) 321-1300
FAX: (716) 321-1865

SMC Pneumatics Inc. (S.F.)
85 Nicholson Lane
San Jose, CA 95134
Tel: (408) 943-9600
FAX: (408) 943-9111

SMC Pneumatics Inc. (St. Louis)
4130 Rider Trail North
Earth City, MO 63045
Tel: (314) 209-0080
FAX: (314) 209-0085

SMC Pneumatics Inc. (Tampa)
8507-H Benjamin Road
Tampa, FL 33634
Tel: (813) 243-8350
FAX: (813) 243-8621

SMC Pneumatics Inc. (Tulsa)
10203 A East 61st Street
Tulsa, OK 74146
Tel: (918) 252-7820
FAX: (918) 252-9511

Europe
ENGLAND
SMC Pneumatics (U.K.) Ltd.
GERMANY
SMC Pneumatik GmbH
ITALY
SMC Italia SpA
FRANCE
SMC Pneumatique SA
HOLLAND
SMC Controls BV
SWEDEN
SMC Pneumatics Sweden AB
SWITZERLAND
SMC Pneumatik AG
AUSTRIA
SMC Pneumatik GmbH
SPAIN
SMC España, S.A.
IRELAND
SMC Pneumatics (Ireland) Ltd.
Asia
JAPAN
SMC Corporation
KOREA
SMC Pneumatics Korea Co., Ltd.
CHINA
SMC (China) Co., Ltd.
HONG KONG
SMC Pneumatics (Hong Kong) Ltd.
SINGAPORE
SMC Pneumatics (S.E.A.) Pte. Ltd.
PHILIPPINES
SMC Pneumatics (Philippines), Inc.
MALAYSIA
SMC Pneumatics (S.E.A.) Sdn. Bhd.
TAIWAN
SMC Pneumatics (Taiwan) Co., Ltd.
THAILAND
SMC Thailand Ltd.
INDIA
SMC Pneumatics (India) Pvt., Ltd.
North America
CANADA
SMC Pneumatics (Canada) Ltd.
MEXICO
SMC Pneumatics (Mexico) S.A. de C.V.
South America
ARGENTINA
SMC Argentina S.A.
CHILE
SMC Pneumatics (Chile) Ltda.

Oceania
AUSTRALIA
SMC Pneumatics (Australia) Pty. Ltd.
NEW ZEALAND
SMC Pneumatics (N.Z.) Ltd.

SMC offers the same quality and engineering expertise in many other pneumatic components

Valves
Directional Control Valves
Manual Valves
Mufflers
Exhaust Cleaners
Quick Exhaust Valves

Valves
Proportional Valves
Mechanical Valves
Miniature Valves
Fluid Valves

Cylinders/Actuators
Compact Cylinders
Miniature Cylinders
Rodless Cylinders
Rotary Actuators
Pneumatic Grippers

Vacuum
Vacuum Ejectors
Vacuum Accessories

Instrumentation
Pneumatic Positioners
Pneumatic Transducers

Air Preparation Equipment
Filters-Regulators-Lubricators
Coalescing Filters
Micro Mist Separators

Fittings
Air Fittings

SMC Pneumatics Inc.
P.O. Box 26640, Indianapolis, IN 46226
Tel: (317) 899-4440 • FAX: (317) 899-3102