Series *VZ3000*/Body Ported
Manifold Specifications

Manifold Standard

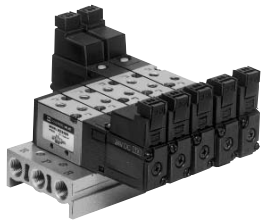

Manifold Specifications

Model		Type 20
Manifold type		Single base/B mount
P(SUP)/R(EXH)		Common SUP/Common EXH
Valve stations		2 to 20 stations
4(A), 2(B) port location		Valve
Port size	1(P), 3/5(R) port	Rc 1/8
	4(A), 2(B) port	M5 x 0.8, C4, C6

Flow Characteristics

Manifold			Port size		Flow characteristics					
			1(P), 5/3(R) port	2(B), 4(A) port	1 → 4/2 (P → A/B)			4/2 → 5/3 (A/B → R)		
					C [dm³/(s·bar)]	b	Cv	C [dm³/(s·bar)]	b	Cv
Body ported For internal pilot	**Type VV5Z3-20**	**VZ3□2□**	1/8	M5 x 0.8	0.46	0.39	0.12	0.75	0.32	0.19
			1/8	C4	0.62	0.33	0.16	0.83	0.27	0.20
			1/8	C6	0.79	0.36	0.21	0.91	0.36	0.24

Note) Value at manifold base mounted, 2 position single operating

How to Order Manifold

Instruct by specifying the valves and blanking plate assembly to be mounted on the manifold along with the manifold base model no.
(Example) VV5Z3-20-031..... 1 pc. (Manifold base)
∗VZ3120-5G-M5..... 2 pcs. (Valve)
∗DXT192-13-1A ..... 1 pc. (Blanking plate assembly)
→ The asterisk denotes the symbol for assembly. Prefix it to the part nos. of the solenoid valve, etc.

Flat Ribbon Cable Manifold

- **One-touch wiring to consolidate connection of external wires.**
- **Clean appearance**
  The flat cable provides wiring on a printed circuit board to the individual valves at the manifold base, enabling the consolidation of external wiring at a touch through a 26 pins MIL connector.

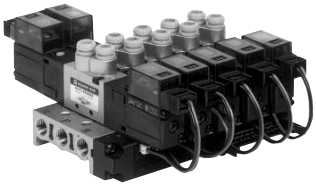

Flat Ribbon Cable Manifold Specifications

Model		Type 20P
Manifold type		Single base/B mount
P(SUP), R(EXH)		Common SUP/Common EXH
Valve stations		3 to 12 stations
4(A), 2(B) port location		Valve
Port size	1(P), 3/5(R) port	Rc 1/8
	4(A), 2(B) port	M5 x 0.8, C4, C6
Applicable flat ribbon cable connector		Socket: 26 pins MIL, with strain relief (Conforming to MIL-C-83503)
Internal wiring		+ COM (For – COM specifications, specify them separately.)
Applicable valve model		VZ3□23-$^{1}_{3}{}^{5}_{6}$MOZ□- $^{M5}_{C4}{}^{C6}$
Rated voltage		100 VAC 50/60 Hz, 110 VAC 50/60 Hz, 24 VDC, 12 VDC

Note) Withstand voltage specifications of wiring unit part is equivalent to JIS C 0704 class 1.

Flow Characteristics

Manifold			Port size		Flow characteristics					
			1(P), 5/3(R) port	2(B), 4(A) port	1 → 4/2 (P → A/B)			4/2 → 5/3 (A/B → R)		
					C [dm³/(s·bar)]	b	Cv	C [dm³/(s·bar)]	b	Cv
Body ported For internal pilot	**Type VV5Z3-20P**	**VZ3□23**	1/8	M5 x 0.8	0.46	0.39	0.12	0.75	0.32	0.19
			1/8	C4	0.62	0.33	0.16	0.83	0.27	0.20
			1/8	C6	0.79	0.36	0.21	0.91	0.36	0.24

Note) Value at manifold base mounted, 2 position single operating

How to Order Manifold

Instruct by specifying the valves, blanking plate assembly and connector assembly to be mounted on the manifold along with the manifold base model no.
(Example) VV5Z3-20P-07..... 1 pc. (Manifold base)
∗VZ3123-5MOZ-C4..... 3 pcs. (Valve)
∗VZ3223-5MOZ-C4..... 3 pcs. (Valve)
∗DXT192-13-3A..... 1 pc. (Blanking plate assembly)
∗DXT192-52-1-4A..... 3 pcs. (Connector assembly)
∗DXT192-52-2-4A..... 3 pcs. (Connector assembly)
→ The asterisk denotes the symbol for assembly. Prefix it to the part nos. of the solenoid valve, etc.

Common SUP/Common EXH

Type 20
How to Order

VV5Z3 − 20 − 05 1 − □

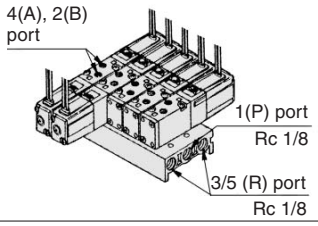

Stations

02	2 stations
⋮	⋮
20	20 stations

P, R port thread type

Nil	Rc
00F	G
00N	NPT
00T	NPTF

Applicable solenoid valve
VZ3□2□-□ G/L/M/D □□- M5/C4/C6

Applicable blanking plate assembly
DXT192-13-1A
Individual EXH spacer assembly
DXT192-21-1A
Individual SUP spacer assembly
DXT192-40-2A

Flat Ribbon Cable Type 20P
How to Order

VV5Z3 − 20P − 05 □

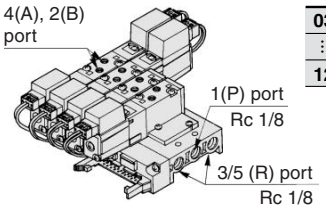

Stations

03	3 stations
⋮	⋮
12	12 stations

P, R port thread type

Nil	Rc
00F	G
00N	NPT
00T	NPTF

Applicable solenoid valve
VZ3□23- 1/3/5/6 MOZ□- M5/C4/C6

Applicable blanking plate assembly
DXT192-13-3A
Applicable connector assembly
DXT192-52-1-⊞A
(For 2 position single)
DXT192-52-2-⊞A
(For 2 position double, 3 position)
Refer to the page 3-10-33 regarding how to order applicable connector assemblies. (1: 100 VAC, 3: 110 VAC, 4: DC).

Option

Combinations of Solenoid Valve, Gasket and Manifold Base

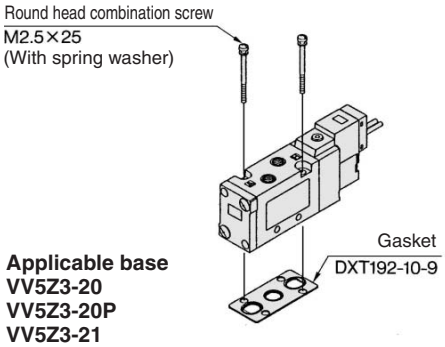

Applicable base
VV5Z3-20
VV5Z3-20P
VV5Z3-21

Blanking Plate Assembly

DXT192-13-1A

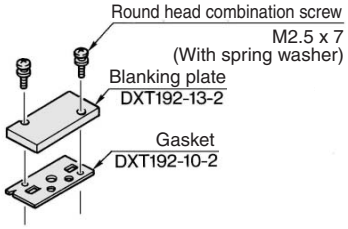

Applicable base
VV5Z3-20
VV5Z3-21

DXT192-13-3A

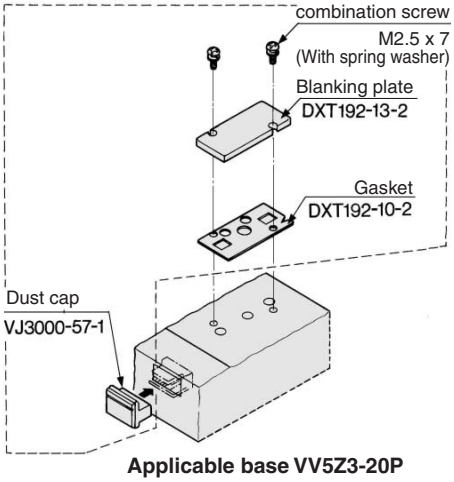

Applicable base VV5Z3-20P

Note) Please contact SMC when using an individual SUP spacer assembly, an individual EXH spacer assembly, or an adapter plate assembly on type 20P.

Individual EXH Spacer Assembly

DXT192-21-1A

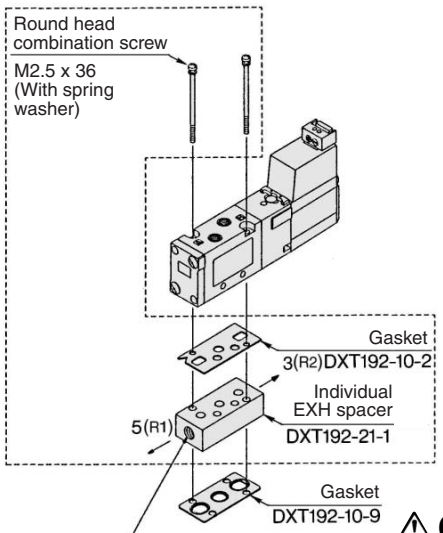

Applicable base
VV5Z3-20
VV5Z3-21

Option

Installation of the VZ300 Valve on the VZ3000 Manifold

- Use of an adaptor plate makes it possible to mount Series VZ300 on the manifold base of Series VZ3000.
- The mounting direction is shown in the diagram below. Mount the solenoid so that it will be on the same side as the single solenoid of the Series VZ3000.

Adapter plate assembly
DXT200-3-2A

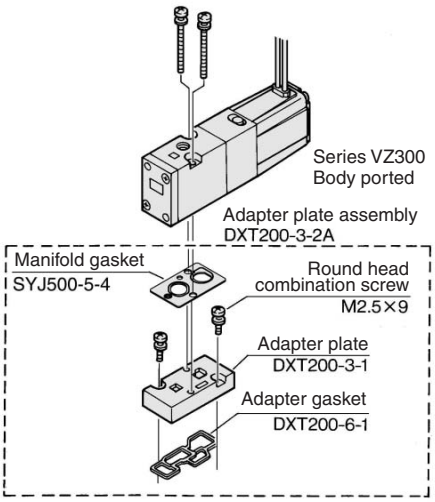

Applicable base
VV5Z3-20
VV5Z3-21

Individual SUP Spacer Assembly

DXT192-40-2A

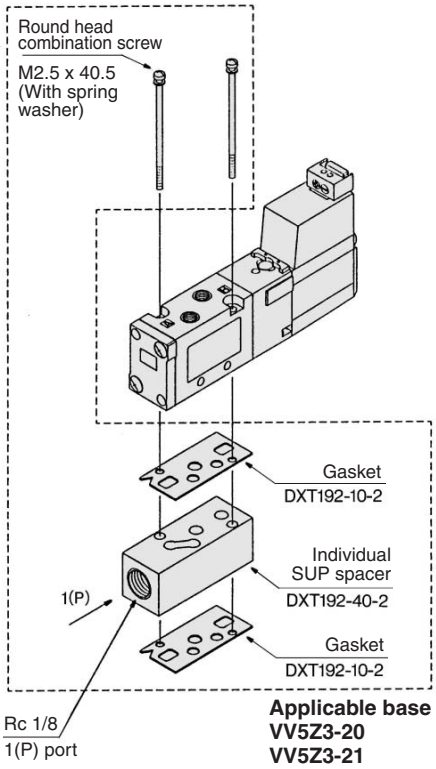

Applicable base
VV5Z3-20
VV5Z3-21

⚠ Caution

Mounting Screw Tightening Torques **M2.5: 0.45 N·m**

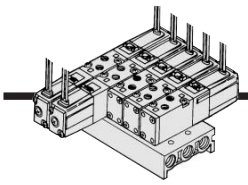

Type 20 Manifold

VV5Z3-20-Station 1

Grommet (G), (H)

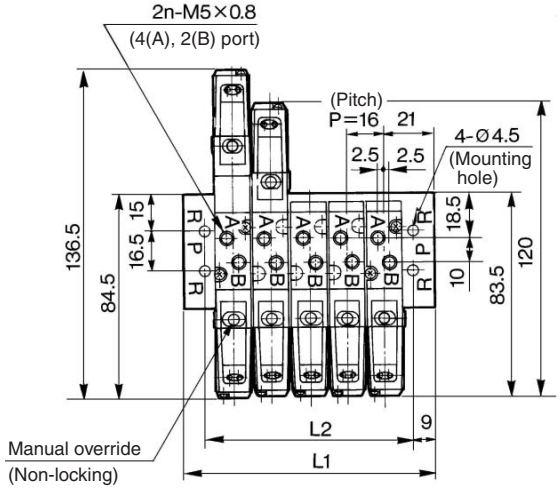

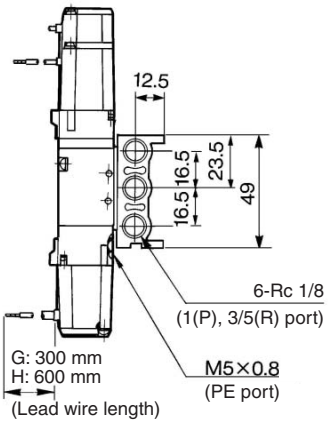

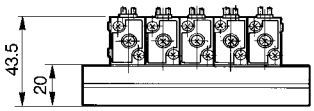

(mm)

Stations	2	3	4	5	6	7	8	9	10	11	12	13	14	15	16	17	18	19	20
L_1	58	74	90	106	122	138	154	170	186	202	218	234	250	266	282	298	314	330	346
L_2	40	56	72	88	104	120	136	152	168	184	200	216	232	248	264	280	296	312	328

L plug connector (L)

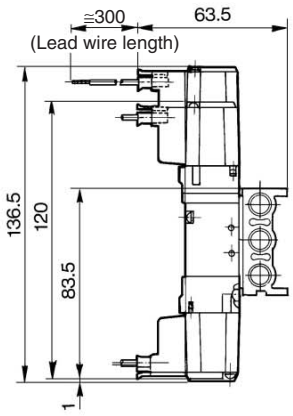

M plug connector (M)

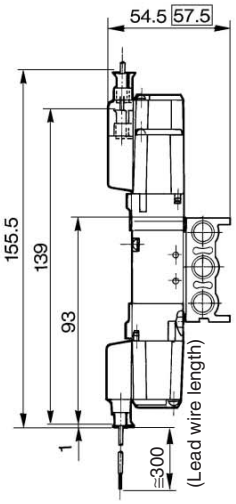

DIN terminal (D)

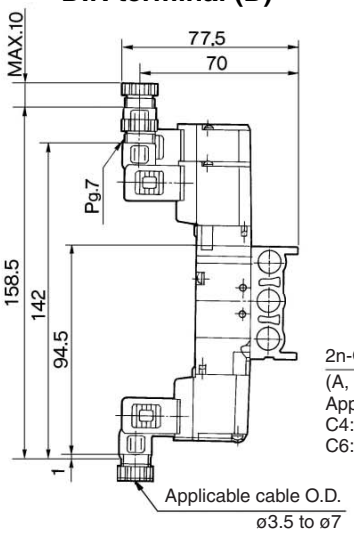

Built-in One-touch fittings

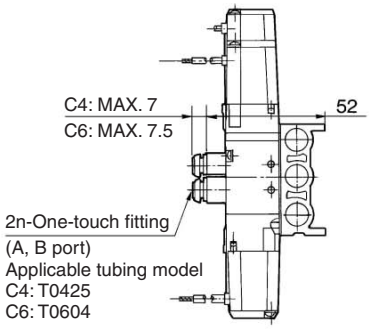

□: With light/surge voltage suppressor

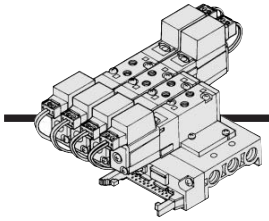

Type 20P Flat Ribbon Cable Manifold

VV5Z3-20P-Station

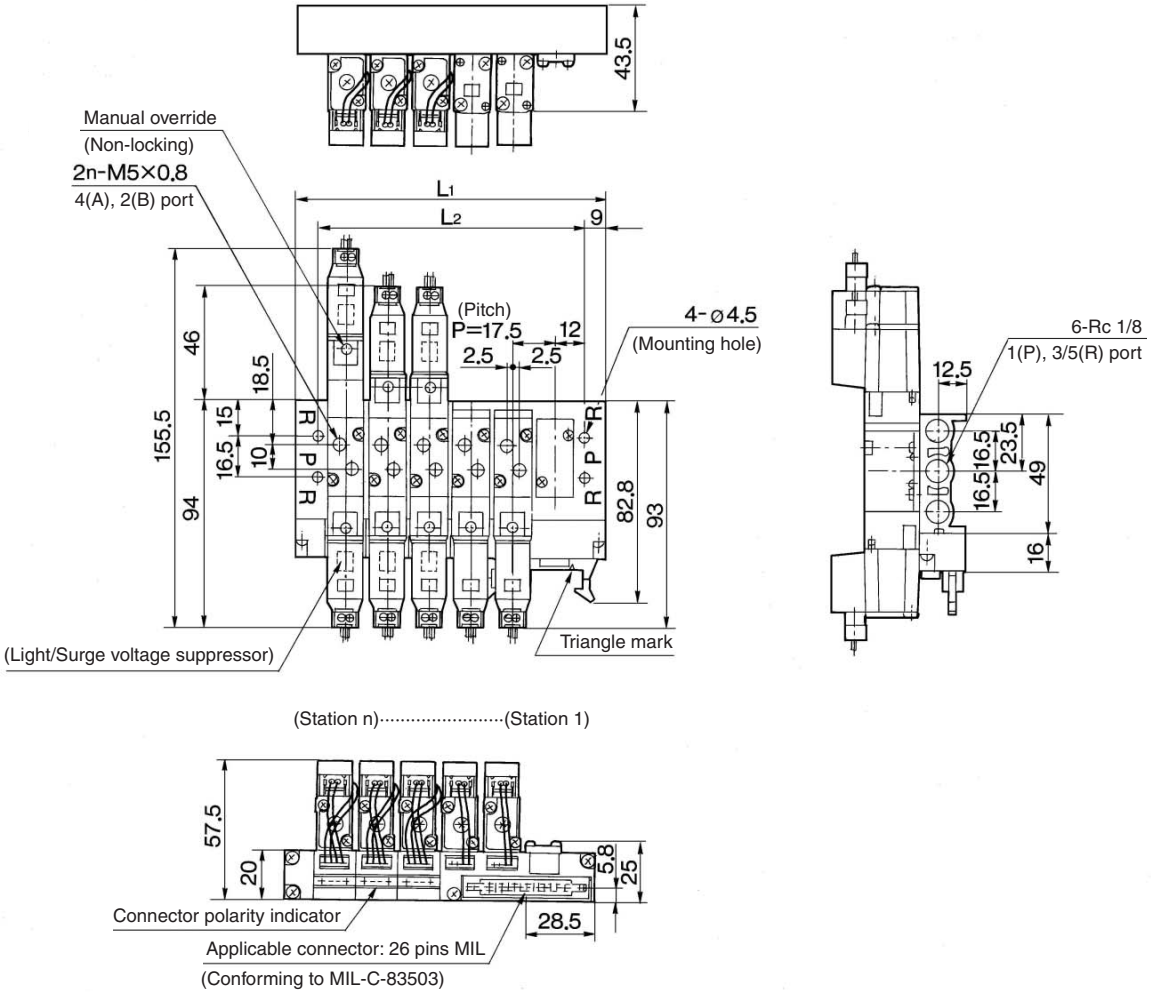

(mm)

Stations	3	4	5	6	7	8	9	10	11	12
L_1	77	94.5	112	129.5	147	164.5	182	199.5	217	234.5
L_2	59	76.5	94	111.5	129	146.5	164	181.5	199	216.5

Built-in One-touch fittings

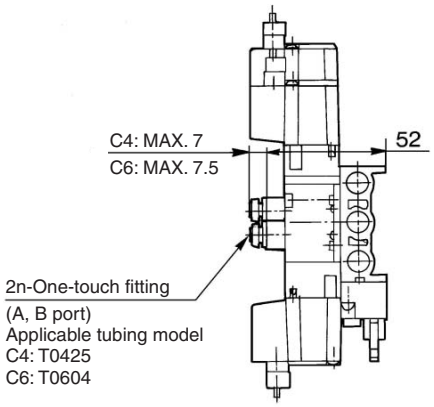

Series *VZ3000*/Base Mounted
Manifold Specifications

Manifold Standard

Manifold Specifications

Model		Type 40	Type 41	Type 42	Type 43
Manifold type		Single base/B mount			
P(SUP)/R(EXH)		Common SUP/Common EXH			
Valve stations		2 to 20 stations			
4(A), 2(B) port Porting specifications	Position	Base	Base		
	Direction	Bottom	Side		
Port size	1(P), 3/5(R) port	Rc 1/8		Rc 1/4	Rc 1/8
	4(A), 2(B) port	M5 x 0.8		Rc 1/8 C6 (One-touch fitting for ø6) B7 (One-touch fitting for 1/4")	C4 (One-touch fitting for ø4) B3 (One-touch fitting for 5/32")

Flow Characteristics

Manifold		Port size		Flow characteristics					
		1(P), 5/3(R) port	2(B), 4(A) port	1 → 4/2 (P → A/B)			4/2 → 5/3 (A/B → R)		
				C [dm³/(s·bar)]	b	Cv	C [dm³/(s·bar)]	b	Cv
VV5Z3-40	**VZ3□4□**	1/8	M5 x 0.8	0.55	0.35	0.15	0.64	0.26	0.16
VV5Z3-41		1/8	M5 x 0.8	0.59	0.35	0.16	0.68	0.23	0.17
VV5Z3-42-01		1/4	1/8	0.74	0.22	0.18	0.82	0.31	0.21
VV5Z3-42-C6		1/4	C6	0.71	0.24	0.17	0.80	0.29	0.20
VV5Z3-43		1/8	C4	0.55	0.29	0.14	0.74	0.32	0.19

Note) Value at manifold base mounted, 2 position single operating

How to Order Manifold

Instruct by specifying the valves and blanking plate assembly to be mounted on the manifold along with the manifold base model no.
(Example) VV5Z3-40-031-M5·····1 pc. (Manifold base)
∗VZ3140-5G-M5·····2 pcs. (Valve)
∗DXT192-13-1A·····1 pc. (Blanking plate assembly)
VV5Z3-43-031-C4·····1 pc. (Manifold base)
∗VZ3140-5LZ·····1 pc. (Valve)
∗VZ3240-5LZ·····1 pc. (Valve)
∗DXT192-13-1A·····1 pc. (Blanking plate assembly)
→The asterisk denotes the symbol for assembly. Prefix it to the part nos. of the solenoid valve, etc.

Flat Ribbon Cable Manifold

- **One-touch wiring to consolidate connection of external wires.**
- **Clean appearance**
  The flat cable provides wiring on a printed circuit board to the individual valves at the manifold base, enabling the consolidation of external wiring at a touch through a 26 pins MIL connector.

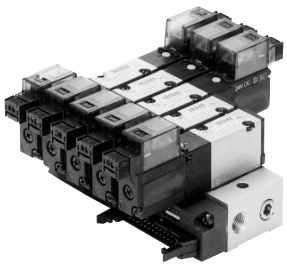

Flat Ribbon Cable Manifold Specifications

Model		Type 41P	Type 43P
Manifold type		Single base/B mount	
P(SUP), R(EXH)		Common SUP/Common EXH	
Valve stations		3 to 12 stations	
4(A), 2(B) port location	Position	Base	
	Direction	Side	
Port size	1(P), 3/5(R) port	Rc 1/8	Rc 1/8
	4(A), 2(B) port	M5 x 0.8	C4 (One-touch fitting for ø4)
Applicable flat ribbon cable connector		Socket: 26 pins MIL, with strain relief (Conforming to MIL-C-83503)	
Internal wiring		+COM specifications (For –COM specifications, specify them separately.)	
Applicable valve model		VZ3□43-$^{1}_{3}{}^{5}_{6}$MOZ□-VZ3□53-$^{1}_{3}{}^{5}_{6}$MOZ□	
Rated voltage		100 VAC 50/60 Hz, 110 VAC 50/60 Hz, 24 VDC, 12 VDC	

Note) Withstand voltage specifications of wiring unit part is equivalent to JIS C 0704 class 1.

Flow Characteristics

Manifold		Port size		Flow characteristics					
		1(P), 5/3(R) port	2(B), 4(A) port	1 → 4/2 (P → A/B)			4/2 → 5/3 (A/B → R)		
				C [dm³/(s·bar)]	b	Cv	C [dm³/(s·bar)]	b	Cv
VV5Z3-41P	**SYJ5□43**	1/8	M5 x 0.8	0.59	0.35	0.16	0.68	0.23	0.17
VV5Z3-43P		1/8	C4	0.59	0.29	0.14	0.74	0.32	0.19

Note) Value at manifold base mounted, 2 position single operating

How to Order Manifold

Instruct by specifying the valves, blanking plate assembly and connector assembly to be mounted on the manifold along with the manifold base model no.
(Example) VV5Z3-43P-07-C4·····1 pc. (Manifold base)
∗VZ3143-5MOZ····· 3 pcs. (Valve)
∗VZ3243-5MOZ····· 3 pcs. (Valve)
∗DXT192-13-3A····· 1 pc. (Blanking plate assembly)
∗DXT192-52-1-4A····· 3 pcs. (Connector assembly)
∗DXT192-52-2-4A····· 3 pcs. (Connector assembly)
→The asterisk denotes the symbol for assembly. Prefix it to the part nos. of the solenoid valve, etc.

Common SUP/Common EXH

Note) For more than 8 stations, supply air to both sides of 1(P) port and exhaust air from both sides of 3/5(R) port.

Type 40

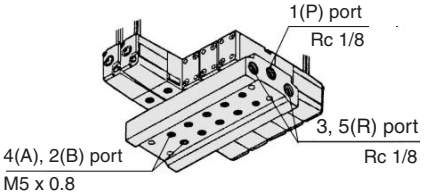

How to Order

VV5Z3 − 40 − 05 2 − M5 □

Stations

02	2 stations
⋮	⋮
20	20 stations

4(A), 2(B) port size

M5	M5 x 0.8

1(P), 3/5(R) port thread type

Nil	Rc
F	G
N	NPT
Z	NPTE

Type 41

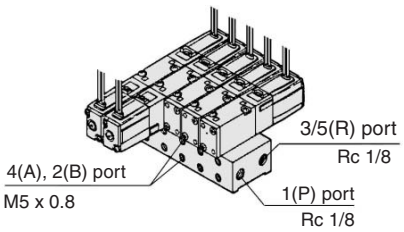

How to Order

VV5Z3 − 41 − 05 1 − M5 □

Stations

02	2 stations
⋮	⋮
20	20 stations

4(A), 2(B) port size

M5	M5 x 0.8

1(P), 3/5(R) port thread type

Nil	Rc
F	G
N	NPT
Z	NPTE

Type 42

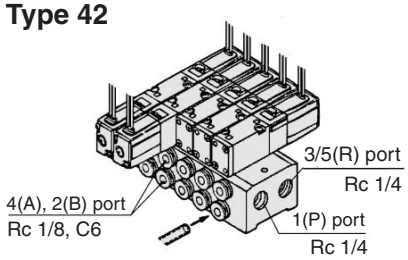

How to Order

VV5Z3 − 42 − 05 1 − C6 □

Stations

02	2 stations
⋮	⋮
20	20 stations

4(A), 2(B) port size

01	Rc 1/8
C6	One-touch fitting for ø6
B7	One-touch fitting for 1/4"

1(P), 3/5(R) port thread type

Nil	Rc
F	G
N	NPT
Z	NPTE

Type 43

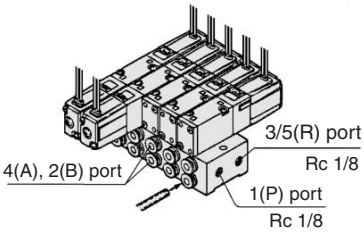

How to Order

VV5Z3 − 43 − 05 1 − C4 □

Stations

02	2 stations
⋮	⋮
20	20 stations

4(A), 2(B) port size

C4	One-touch fitting for ø4
B3	One-touch fitting for 5/32"

1(P), 3/5(R) port thread type

Nil	Rc
F	G
N	NPT
Z	NPTE

Applicable solenoid valve

VZ3□4□-□ G/L/M/D □□

VZ3□5□-□ G/L/M/D □□

Applicable blanking plate assembly
DXT192-13-1A

Applicable individual EXH spacer assembly
DXT192-21-1A

Applicable individual SUP spacer assembly
(Except VV5Z3-40 type)
DXT192-40-1A

Applicable interface regulator
ARBZ3000-00-P

Flat ribbon cable type 41P

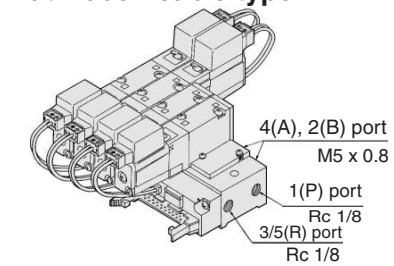

How to Order

VV5Z3 − 41P − 05 − M5 □

Stations

03	3 stations
⋮	⋮
12	12 stations

4(A), 2(B) port size

M5	M5 x 0.8

1(P), 3/5(R) port thread type

Nil	Rc
F	G
N	NPT
Z	NPTE

Applicable solenoid valve

VZ3□43-1/3/5/6 MOZ□

VZ3□53-1/3/5/6 MOZ□

Applicable blanking plate assembly
DXT192-13-3A

Applicable connector assembly
DXT192-52-1-∗A
(For 2 position single)
DXT192-52-2-∗A
(For 2 position double, 3 position)
∗ 1: 100 VAC, 3: 110 VAC, 4: DC

For "How to order applicable connector assemblies", refer to page 3-3-7.

Flat ribbon cable type 43P

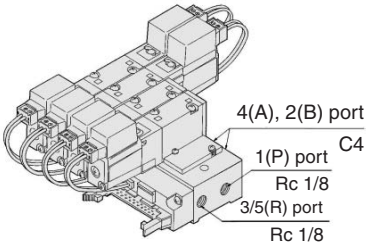

How to Order

VV5Z3 − 43P − 05 − C4 □

Stations

03	3 stations
⋮	⋮
12	12 stations

4(A), 2(B) port size

C4	One-touch fitting for ø4
B3	One-touch fitting for 5/32"

1(P), 3/5(R) port thread type

Nil	Rc
F	G
N	NPT
Z	NPTE

DIN Rail Manifold

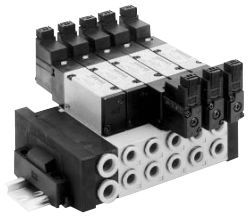

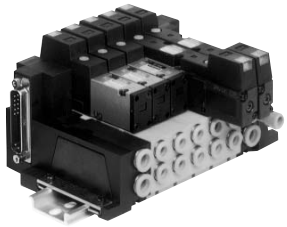

Manifold Specifications

Model		Type 45	Type 45F
Manifold type		Stacking type non plug-in type	Stacking type plug-in type
P(SUP), R(EXH)		Common SUP/Common EXH	
Valve stations		2 to 20 stations	
A, B port Porting specifications	Location	Base	
	Direction	Side	
Port size	1(P), 3/5(R) port	C8 (One-touch fitting for ø8)	
	4(A), 2(B) port	C4 (One-touch fitting for ø4) C6 (One-touch fitting for ø6)	
Connector		—	MIL-C-24308 JIS-X-5101 Applicable for D-sub connector
Internal wiring		—	COM Note)

Note) It is available at +COM or –COM.

Flow Characteristics

Manifold		Port size		Flow characteristics					
		1(P), 5/3(R) port	2(B), 4(A) port	1 → 4/2 (P → A/B)			4/2 → 5/3 (A/B → R)		
				C [dm³/(s·bar)]	b	Cv	C [dm³/(s·bar)]	b	Cv
VV5Z3-45	VZ3□4□	C8	C4	0.59	0.28	0.15	0.83	0.34	0.22
		C8	C6	0.76	0.23	0.18	0.86	0.29	0.22

Note) Value at manifold base mounted, 2 position single operating

How to Order Manifold

Instruct by specifying the valves and blanking plate assembly to be mounted on the manifold along with the manifold base model no.
(Example) VV5Z3-45FD-06-C6C·· 1 pc. (Manifold base)
∗VZ3143-5FZ·····2 pcs. (Valve)
∗VZ3243-5FZ·····3 pcs. (Valve)
∗VZ3000-69-1A ·····1 pc. (Blanking plate assembly)
→The asterisk denotes the symbol for assembly. Prefix it to the part nos. of the solenoid valve, etc.

DIN Rail Manifold

Common SUP/Common EXH

Type 45 (Non plug-in type) How to Order

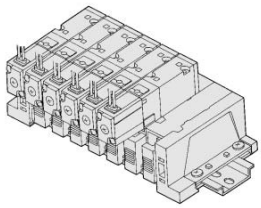

VV5Z3 – 45 – 05 D – C6 C – [ ]

Stations

02	2 stations
⋮	⋮
20	20 stations

SUP/EXH block mounting position

U	U side: 2 to 10 stations
D	D side: 2 to 10 stations
B	Both sides: 2 to 20 stations
M ∗	Special specifications

∗ For special specifications, indicate separately by the manifold specification sheet.

4(A), 2(B) port size

C4	One-touch fitting for ø4
C6	One-touch fitting for ø6
M∗	Mixed

∗ In the case of mixed specifications (M), indicate separately on the manifold specification sheet.

Applicable solenoid valve

VZ3□4□-□ G L M D □□

VZ3□5□-□ G L M D □□

Applicable blanking plate assembly
VZ3000-69-2A

DIN rail length specified

Nil	Standard length	
3	For 3 stations	(Specify a longer rail than the standard length.)
⋮	⋮	
20	For 20 stations	

Type 45F (Plug-in type) How to Order

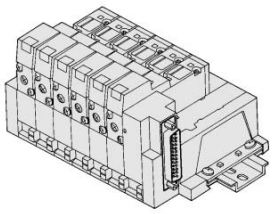

VV5Z3 – 45F D – 05 [ ] – C6 C – [ ]

Connector mounting direction

U	U side: 2 to 10 stations
D	D side: 2 to 10 stations
B	Both sides: 11 to 20 stations

Stations

02	2 stations
⋮	⋮
20	20 stations

SUP/EXH block mounting position

Nil	For 2 to 10 stations : One side (Same as direction of connector mount) For 11 to 20 stations: Both sides
B	For 2 to 10 stations: Both sides
M ∗	Special specifications

∗ For special specifications, indicate separately by the manifold specification sheet.

4(A), 2(B) port size

C4	One-touch fitting for ø4
C6	One-touch fitting for ø6
M ∗	Mixed

∗ In the case of mixed specifications (M), indicate separately on the manifold specification sheet.

Applicable solenoid valve
VZ3□43-□FZ□
Applicable blanking plate assembly
VZ3000-69-1A

DIN rail length specified

Nil	Standard length	
3	For 3 stations	(Specify a longer rail than the standard length.)
⋮	⋮	
20	For 20 stations	

Option/Standard Manifold, Flat Ribbon Cable Manifold

Combinations of Solenoid Valve, Manifold Gasket and Manifold Base

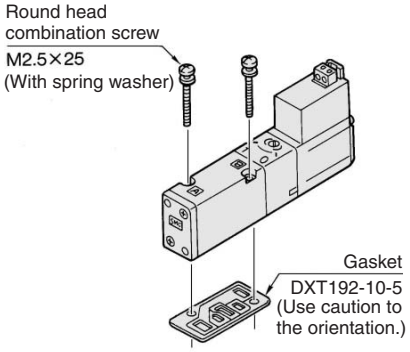

Applicable base
VV5Z3-40
VV5Z3-41
VV5Z3-42
VV5Z3-43
VV5Z3-41P
VV5Z3-43P

Installation of the VZ300 Valve on the VZ3000 Manifold

- Use of an adaptor plate makes it possible to mount Series VZ300 on the manifold base of Series VZ3000.
- The mounting direction is shown in the diagram below. Mount the solenoid so that it will be on the same side as the single solenoid of the Series VZ3000.
- 2(A) port of 3 port valve should be 2(B) port of manifold base.

Adapter Plate Assembly
DXT200-3-1A

Applicable base
VV5Z3-40
VV5Z3-41
VV5Z3-42
VV5Z3-43

Series VZ300 Base mounted

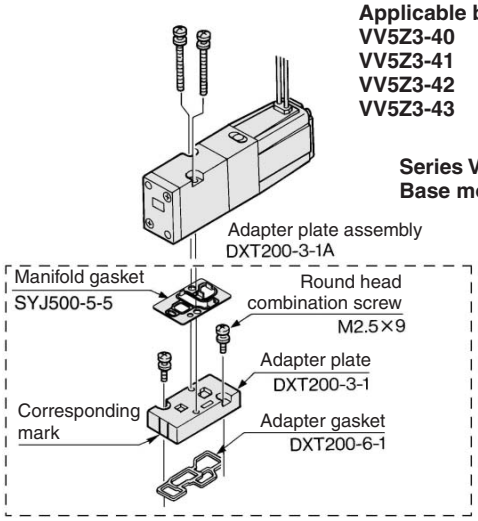

Blanking Plate Assembly

DXT192-13-1A

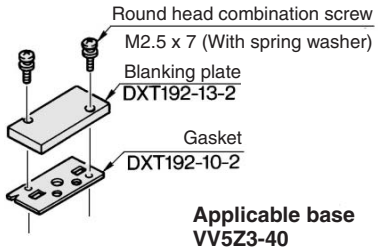

Applicable base
VV5Z3-40
VV5Z3-41
VV5Z3-42
VV5Z3-43

DXT192-13-3A

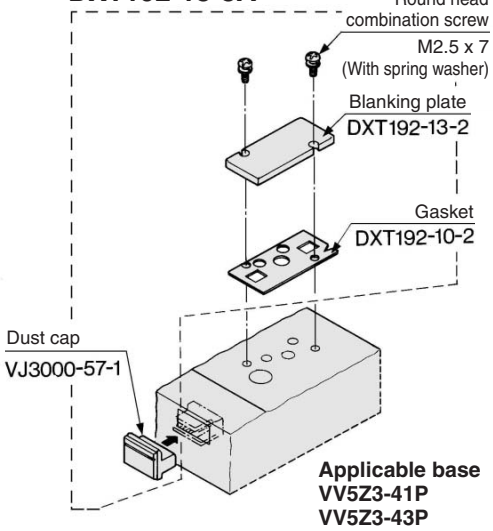

Applicable base
VV5Z3-41P
VV5Z3-43P

Individual EXH Spacer Assembly

DXT192-21-1A

Applicable base
VV5Z3-40
VV5Z3-41
VV5Z3-42
VV5Z3-43

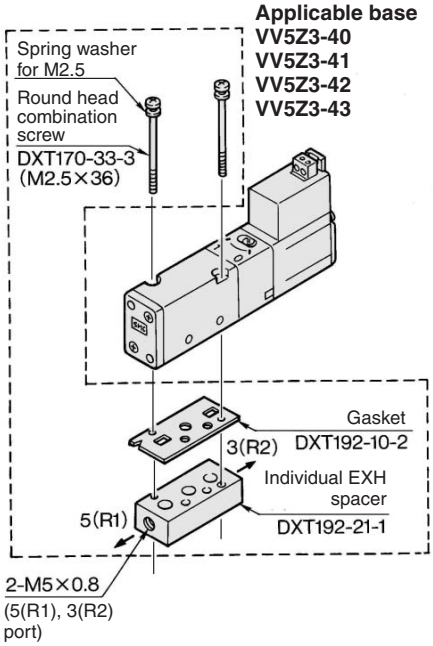

Individual SUP Spacer Assembly

DXT192-40-1A

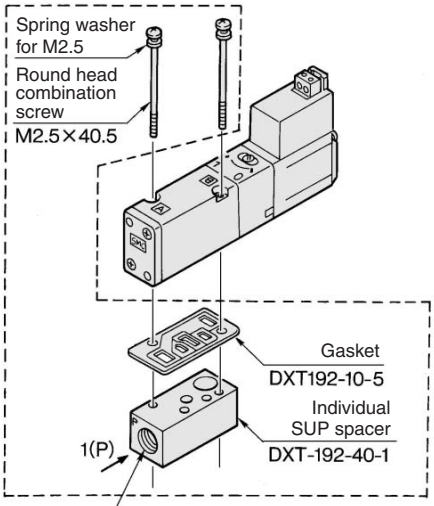

Applicable base
VV5Z3-41
VV5Z3-42
VV5Z3-43

Interface regulator (P port regulation)

Interface regulator can be placed on top of the manifold base to reduce the pressure of each of the valves.

ARBZ3000-00-P

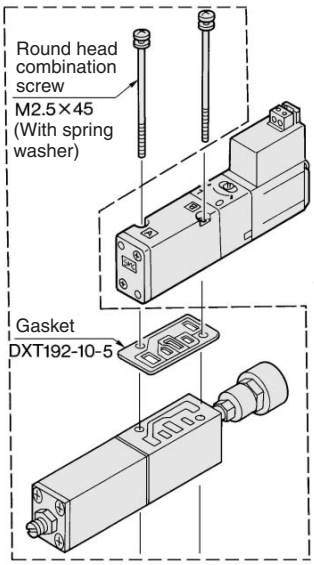

Applicable base
VV5Z3-40
VV5Z3-41
VV5Z3-42
VV5Z3-43

Before using, refer to page 3-3-8.

Note) Please contact SMC when using an individual EXH spacer assembly, an individual SUP spacer assembly, an adapter plate assembly, or an interface regulator on 41P and 43P types.

⚠ Caution

Mounting Screw Tightening Torques	M2.5: 0.45 N·m

Option/DIN Rail Manifold

Blanking Plate Assembly

VZ3000-69-2A

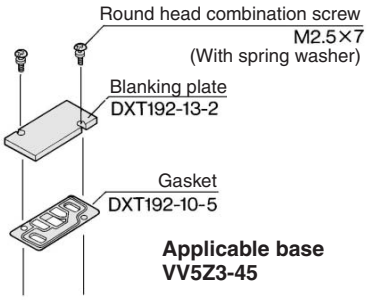

VZ3000-69-1A

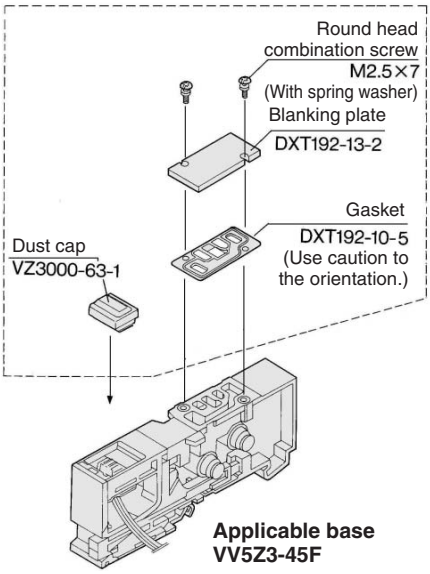

⚠ Caution

Mounting Screw Tightening Torques

M2.5: 0.32 N·m
(For stacking type manifold)

Combination of Solenoid Valve, Gasket and Manifold Base

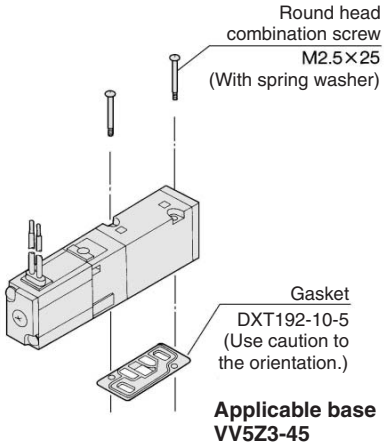

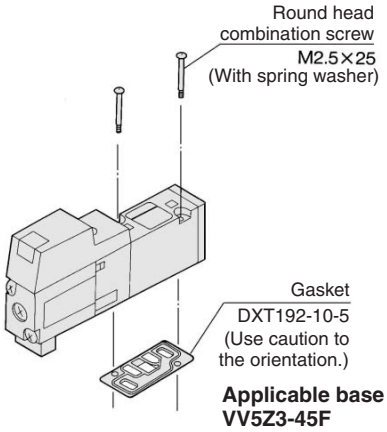

SUP Block Disk

By installing a SUP block disk in the pressure supply passage of a manifold valve, it is possible to supply two or more different high and low pressures to one manifold.

VZ3000-79-1A

EXH Block Disk

By installing an EXH block disk in the exhaust passage of a manifold valve, it is possible to divide the valve's exhaust so that it does not affect another valve.

VZ3000-79-1A

Applicable Plug Assembly (D-sub connector cable assembly)

Cable length	Assembly part no.	Component parts
1.5 m	VVZS3000-21A-1	Plug MIL standard Number of terminals: 25 Cable: 25 cores x 0.3 mm²
3 m	VVZS3000-21A-2	
5 m	VVZS3000-21A-3	
8 m	VVZS3000-21A-4	

For details, refer to page 3-3-8.

Exploded View/DIN Rail Manifold

Type 45 Manifold

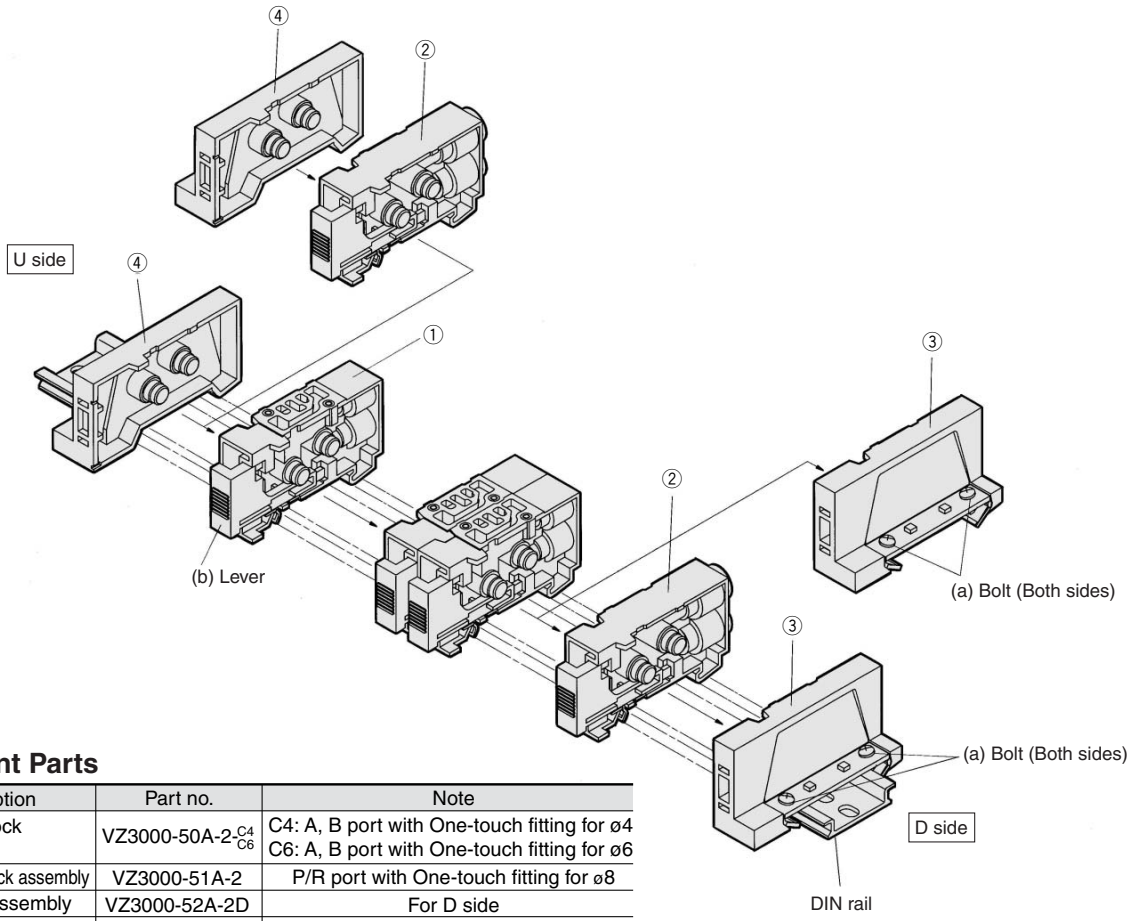

Replacement Parts

No.	Description	Part no.	Note
①	Manifold block assembly	VZ3000-50A-2-$^{C4}_{C6}$	C4: A, B port with One-touch fitting for ø4 C6: A, B port with One-touch fitting for ø6
②	SUP/EXH block assembly	VZ3000-51A-2	P/R port with One-touch fitting for ø8
③	End block assembly	VZ3000-52A-2D	For D side
④	End block assembly	VZ3000-52A-2U	For U side

How to Increase Manifold Base

Station expansion is possible at any position.

(1) Loosen (both) bolts (a), which are securing the manifold onto the DIN rail, 1 to 2 turns.
(To remove the manifold base from the DIN rail, loosen the bolts 4 to 5 turns.)

(2) Press lever (b) to disconnect the manifold block assembly at the location in which you wish to place an additional manifold block assembly. (However, there are no levers between ① and ④ or between ② and ④. They can be disconnected by merely pulling them apart.)

(3) Mount additional manifold block assembly on the DIN rail as shown in the Fig. (2).

(4) Press the block assemblies and tighten the bolts (a) to fix them to the DIN rail.

Note) When there are 10 or fewer manifold block assemblies, and more are added to make a total of 11 or more, a supply/exhaust block assembly must also be added.

Fig. (1)

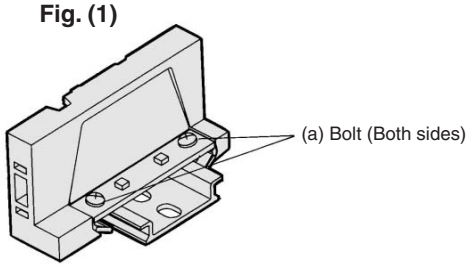

Fig. (2)

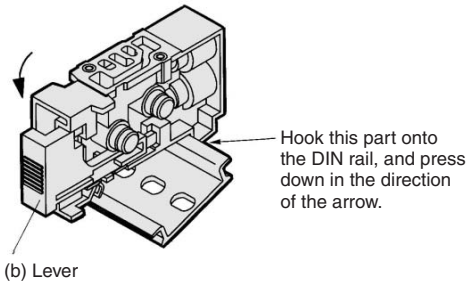

Exploded View/DIN Rail Manifold

Type 45F Manifold

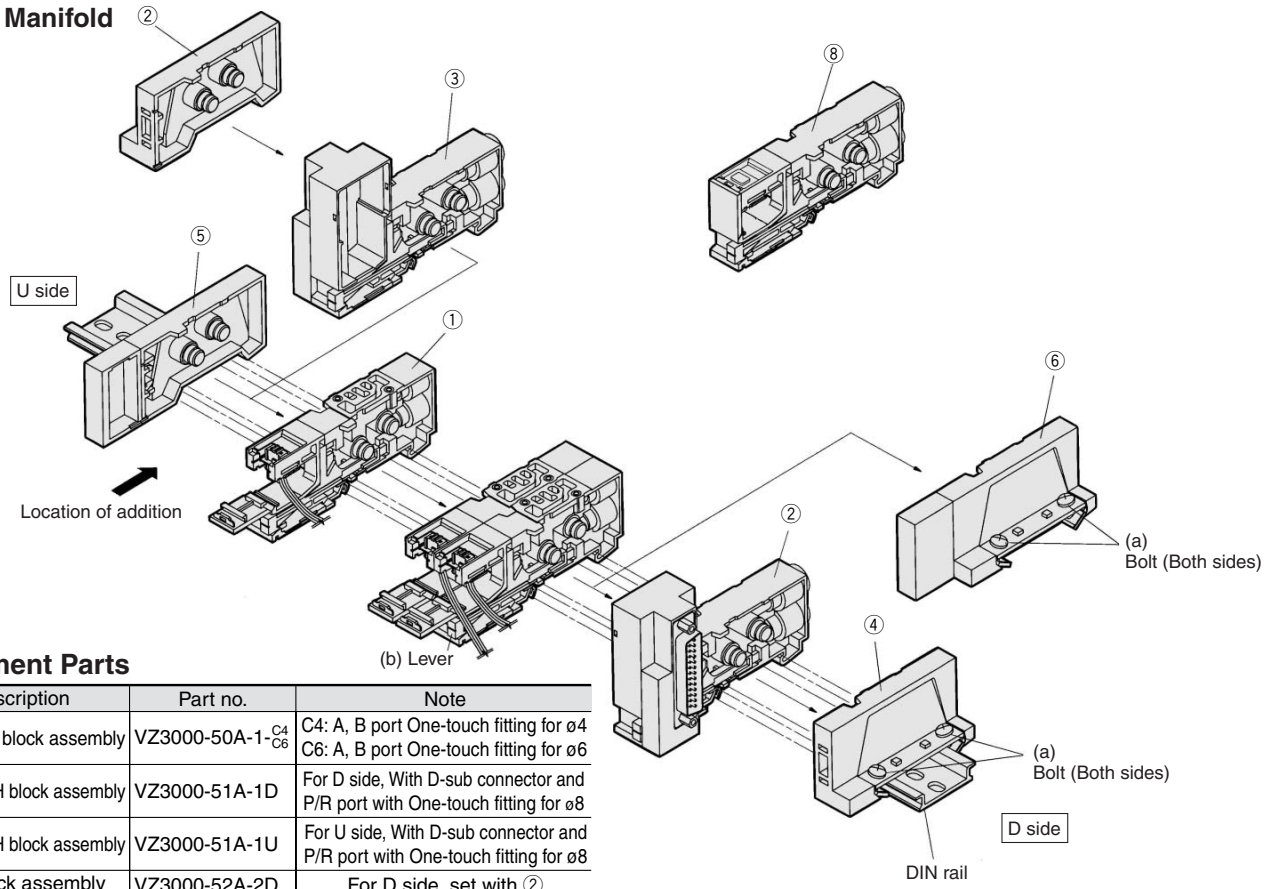

Replacement Parts

No.	Description	Part no.	Note
①	Manifold block assembly	VZ3000-50A-1-$^{C4}_{C6}$	C4: A, B port One-touch fitting for ø4 C6: A, B port One-touch fitting for ø6
②	SUP/EXH block assembly	VZ3000-51A-1D	For D side, With D-sub connector and P/R port with One-touch fitting for ø8
③	SUP/EXH block assembly	VZ3000-51A-1U	For U side, With D-sub connector and P/R port with One-touch fitting for ø8
④	End block assembly	VZ3000-52A-2D	For D side, set with ②
⑤	End block assembly	VZ3000-52A-1U	For U side
⑥	End block assembly	VZ3000-52A-1D	For D side
⑦	End block assembly	VZ3000-52A-2U	For U side, set with ③
⑧	SUP/EXH block assembly	VZ3000-51A-1M	Without D-sub connector For indicated location

How to Increase Manifold Base

To add a manifold block assembly, add it to the U side so that the terminal number of the D-sub connector and the valve link position will be in accordance with the circuit diagram.

(1) Loosen (both) bolts (a), which are securing the manifold onto the DIN rail, 1 to 2 turns.
(To remove the manifold base from the DIN rail, loosen the bolts 4 to 5 turns.)

(2) Using a flat screwdriver, press lever (b) to disengage the link of the manifold block assembly on the U side or the D side from the SUP/EXH block assembly or from the end block assembly. (However, there are no levers between ⑤ and ①. They can be disconnected by merely pulling them apart.)

(3) Remove the housing cover from the D-sub connector portion of the SUP/EXH block assembly. (Refer to Fig. (1).)

(4) Following the procedure shown in Fig. (2), mount the manifold block assembly to be added onto the DIN rail. As shown in Fig. (3), insert the pin of the lead wire assembly into the D-sub connector, and attach the round crimped terminal to the screw that connects the wires.

(5) Press the block assemblies and tighten the bolts (a) to fix them to the DIN rail.

Note) When there are 10 or fewer manifold block assemblies, and more are added to make a total of 11 or more, a supply/exhaust block assembly must also be added.

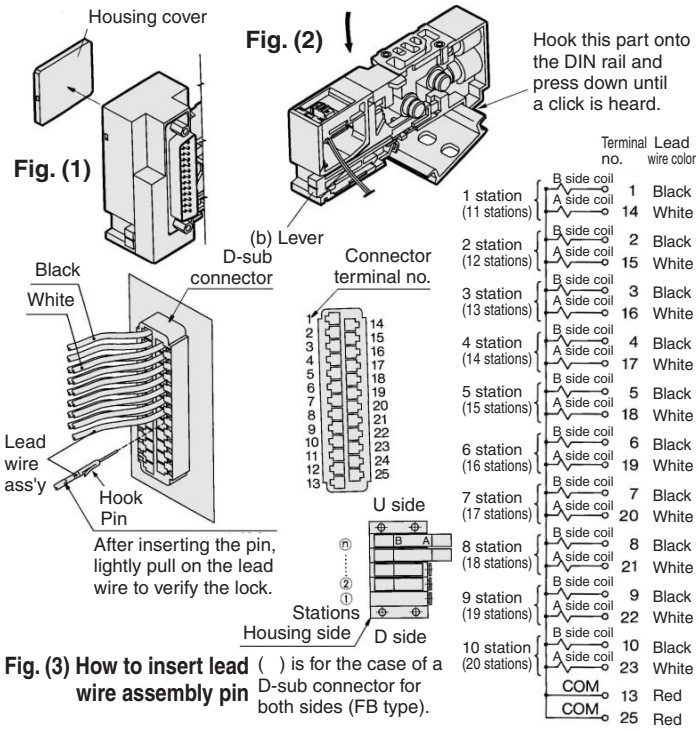

Fig. (3) How to insert lead wire assembly pin

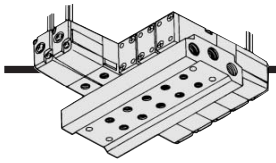

Type 40 Manifold: Bottom Ported

VV5Z3-40-Station 2-M5

Grommet (G), (H)

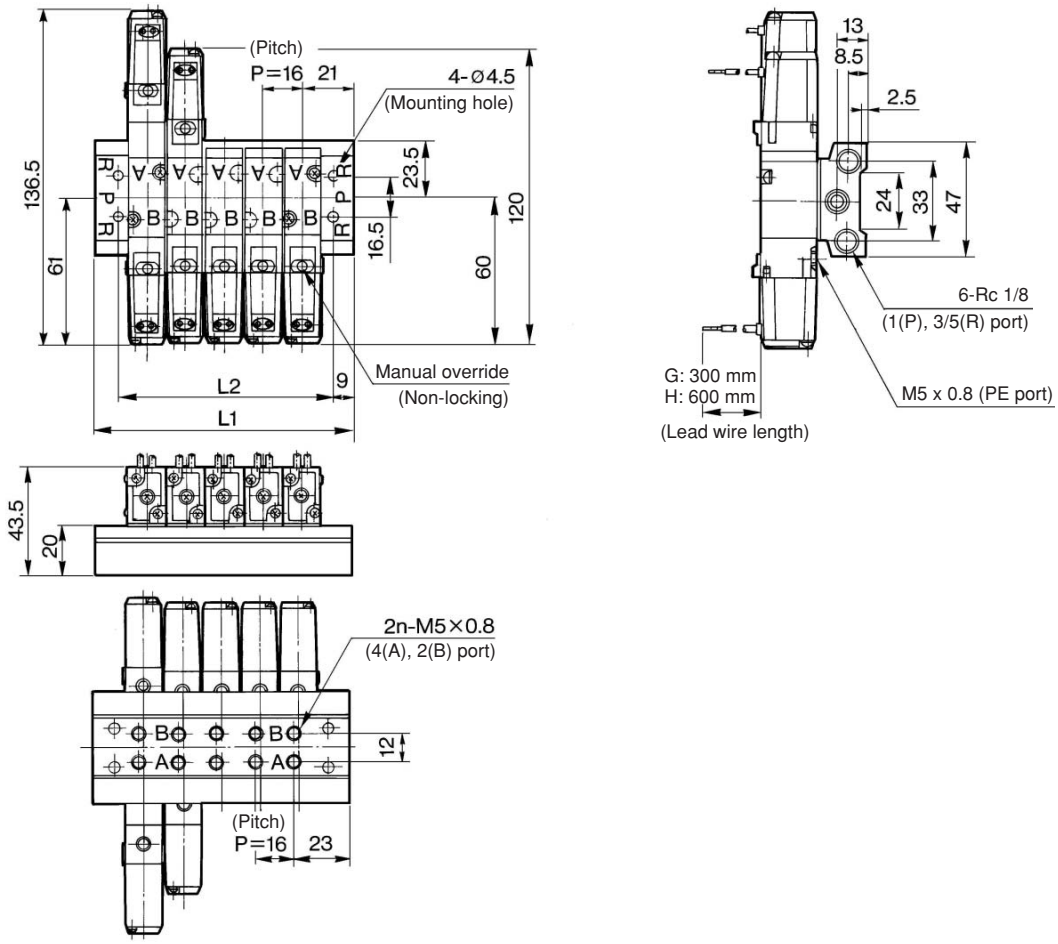

(mm)

Stations	2	3	4	5	6	7	8	9	10	11	12	13	14	15	16	17	18	19	20
L_1	58	74	90	106	122	138	154	170	186	202	218	234	250	266	282	298	314	330	316
L_2	40	56	72	88	104	120	136	152	168	184	200	216	232	248	264	280	296	312	328

L plug connector (L)

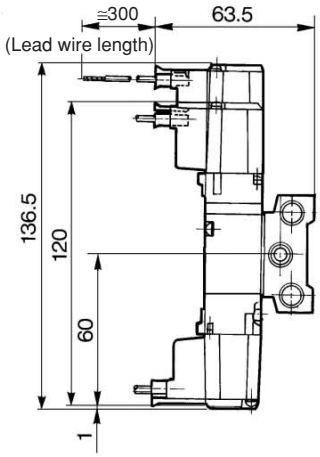

M plug connector (M)

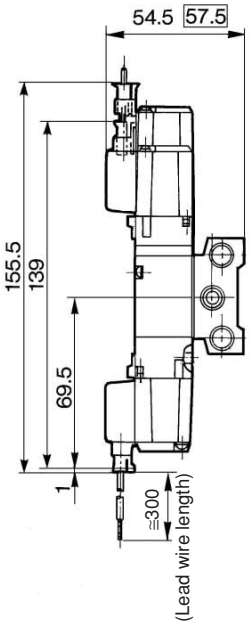

DIN terminal (D)

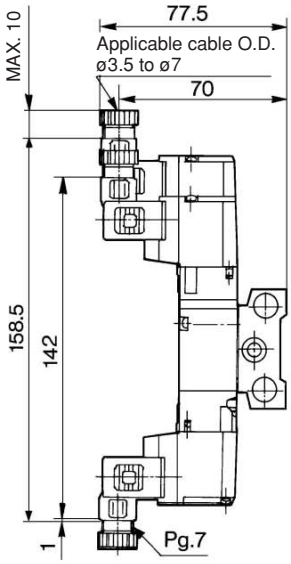

Built-in speed controllers

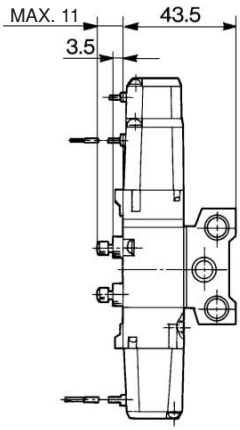

□: With light/surge voltage suppressor

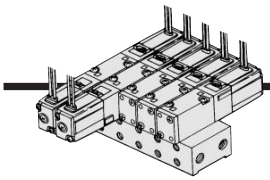

Type 41 Manifold: Side Ported

VV5Z3-41-Station 1-M5

Grommet (G), (H)

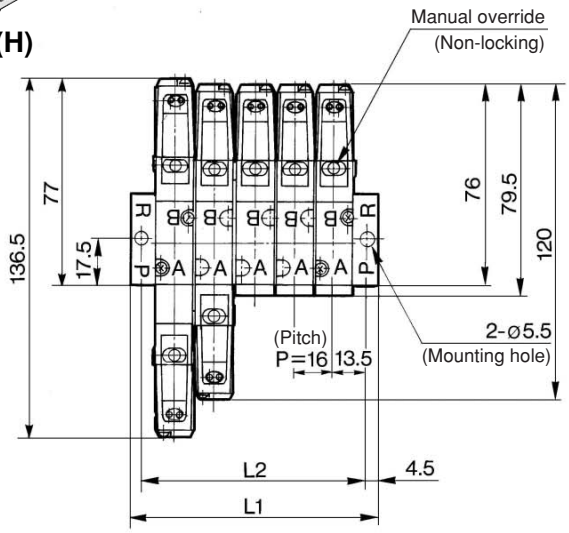

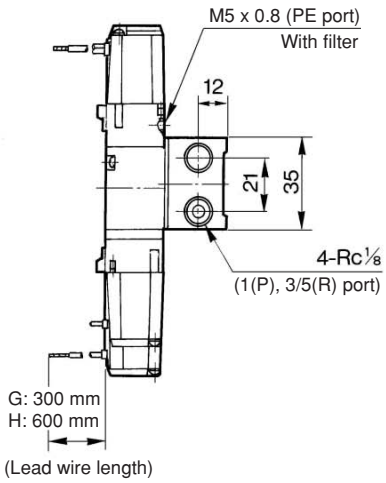

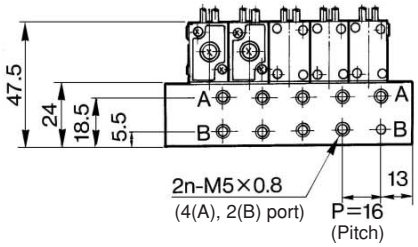

(mm)

Stations	2	3	4	5	6	7	8	9	10	11	12	13	14	15	16	17	18	19	20
L_1	52	68	84	100	116	132	148	164	180	196	212	228	244	260	276	292	308	324	340
L_2	43	59	75	91	107	123	139	155	171	187	203	219	235	251	267	283	299	315	331

L plug connector (L)

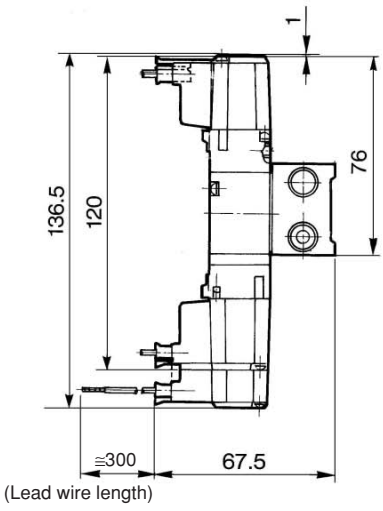

M plug connector (M)

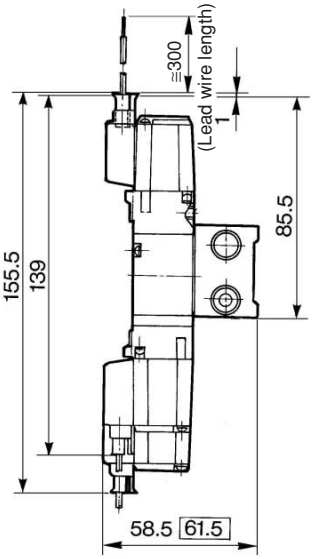

DIN terminal (D)

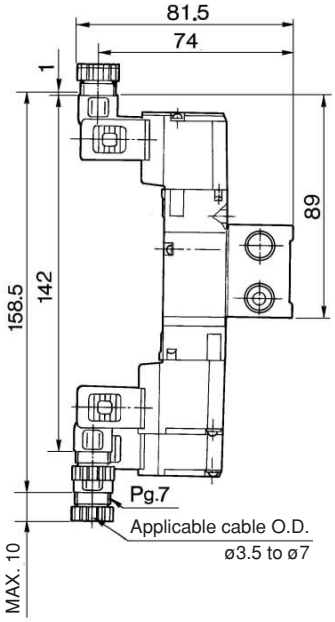

Built-in speed controllers

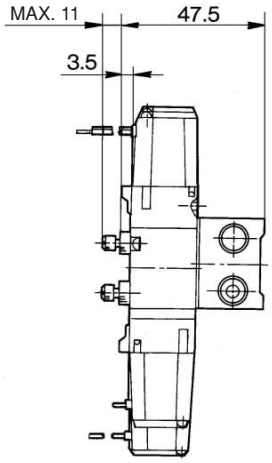

□: With light/surge voltage suppressor

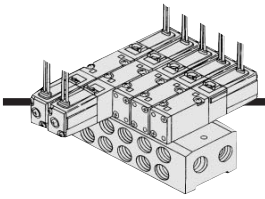

Type 42 Manifold: Side Ported

VV5Z3-42-Station 1-01

Grommet (G), (H)

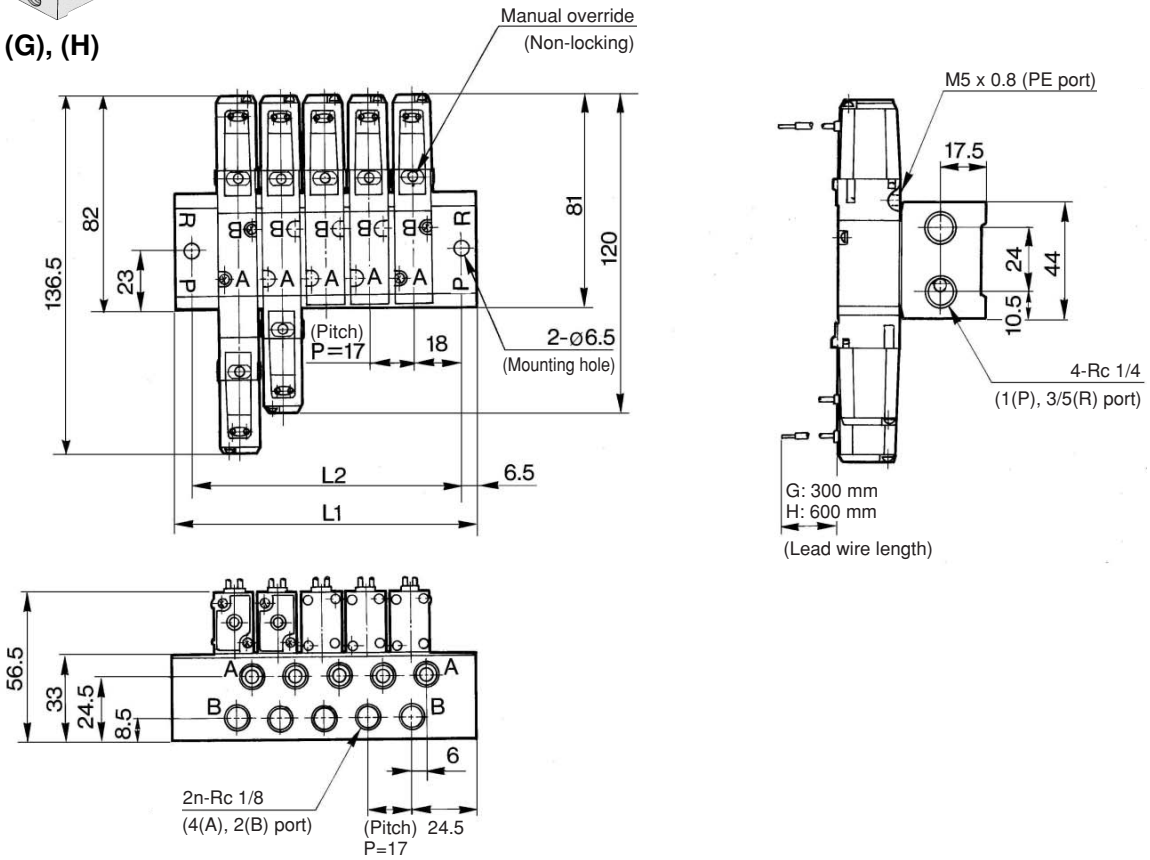

(mm)

Stations	2	3	4	5	6	7	8	9	10	11	12	13	14	15	16	17	18	19	20
L_1	66	83	100	117	134	151	168	185	202	219	236	253	270	287	304	321	338	355	372
L_2	53	70	87	104	121	138	155	172	189	206	223	240	257	274	291	308	325	342	359

L plug connector (L)

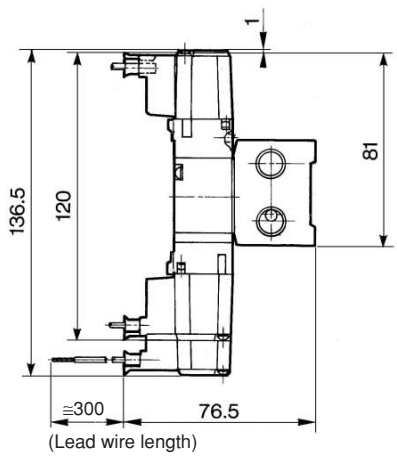

M plug connector (M)

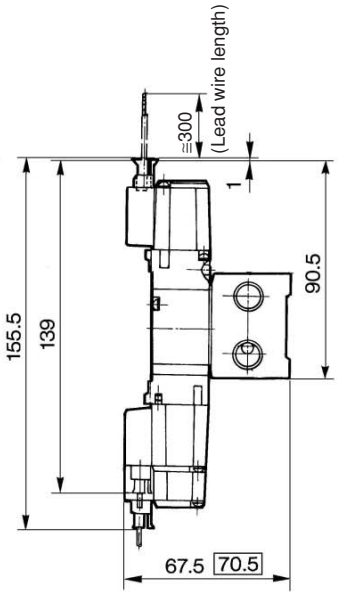

DIN terminal (D)

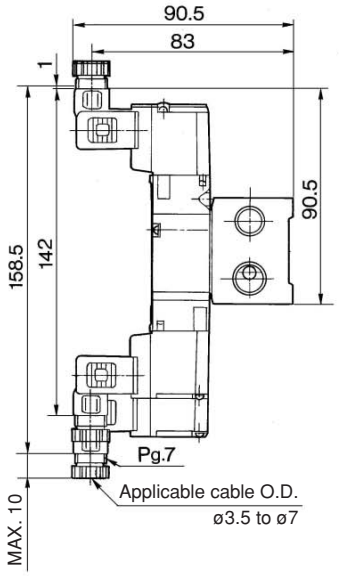

Built-in speed controllers

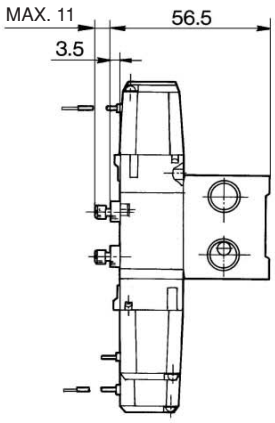

□: With light/surge voltage suppressor

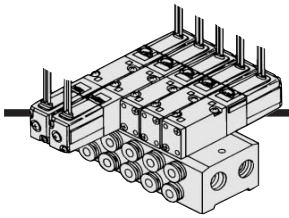

Type 42 Manifold: Side Ported

VV5Z3-42-Station 1-C6

Grommet (G), (H)

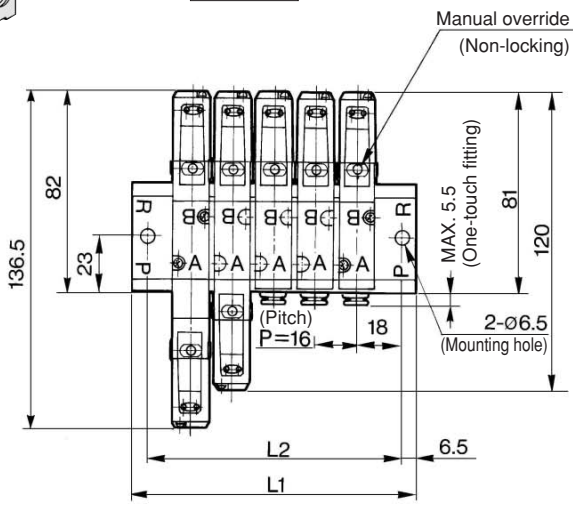

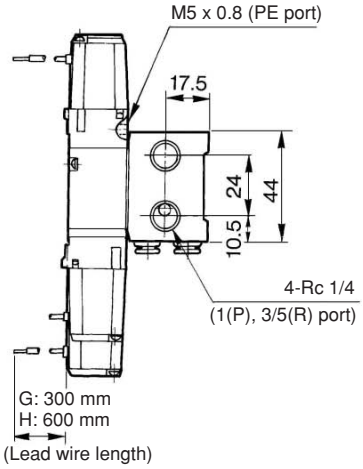

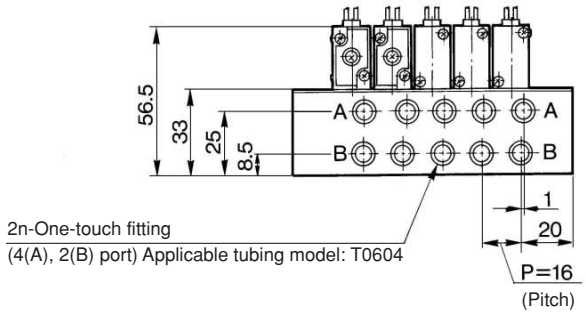

(mm)

Stations	2	3	4	5	6	7	8	9	10	11	12	13	14	15	16	17	18	19	20
L_1	65	81	97	113	129	145	161	177	193	209	225	241	257	273	289	305	321	337	353
L_2	52	68	84	100	116	132	148	164	180	196	212	228	244	260	276	292	308	324	340

L plug connector (L)

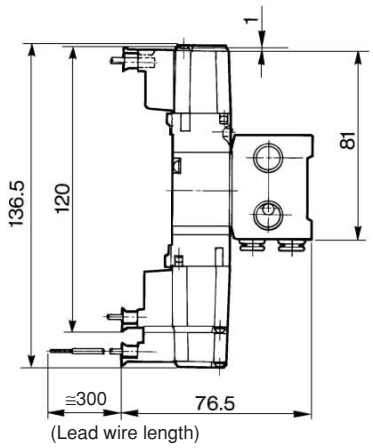

M plug connector (M)

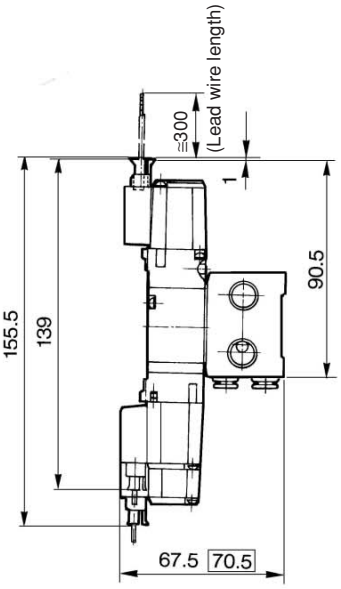

DIN terminal (D)

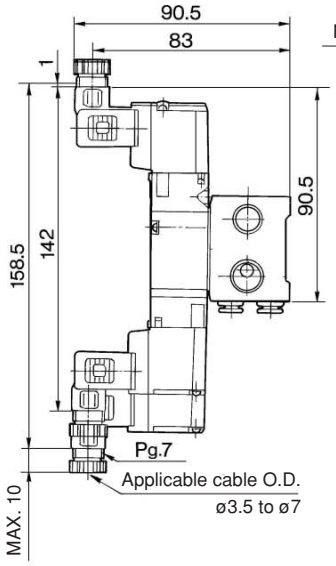

Built-in speed controllers

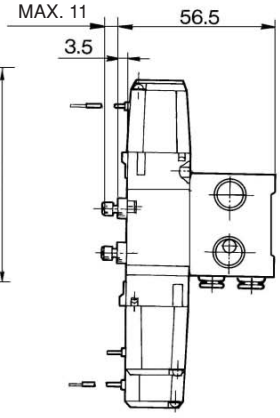

□: With light/surge voltage suppressor

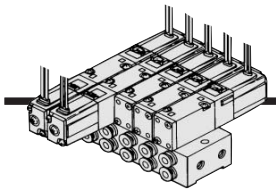

Type 43 Manifold: Side Ported

VV5Z3-43-Station 1-C4

Grommet (G), (H)

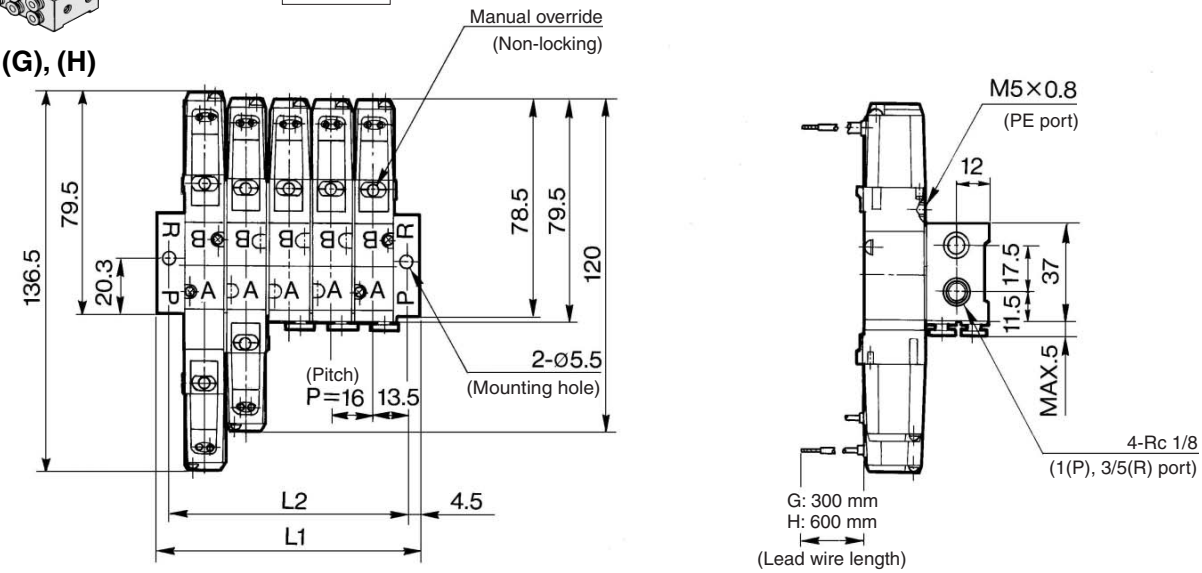

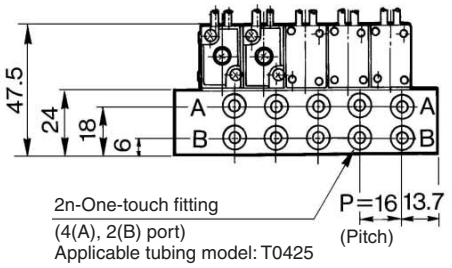

(mm)

Stations	2	3	4	5	6	7	8	9	10	11	12	13	14	15	16	17	18	19	20
L_1	52	68	84	100	116	132	148	164	180	196	212	228	244	260	276	292	308	324	340
L_2	43	59	75	91	107	123	139	155	171	187	203	219	235	251	267	283	299	315	331

L plug connector (L)

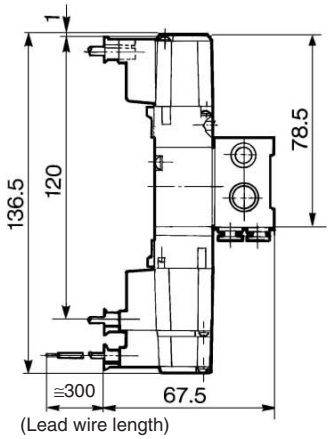

M plug connector (M)

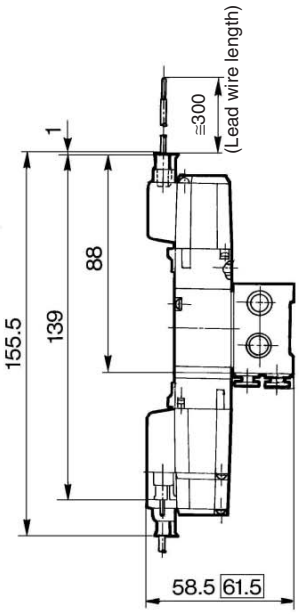

DIN terminal (D)

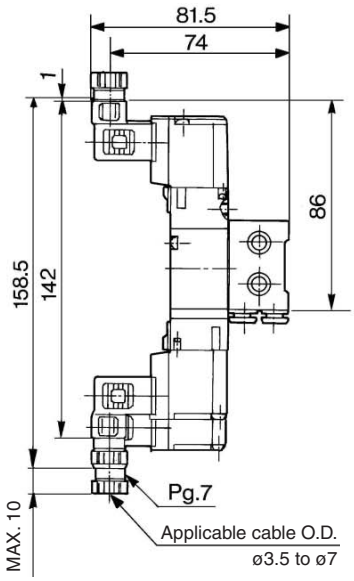

Built-in speed controllers

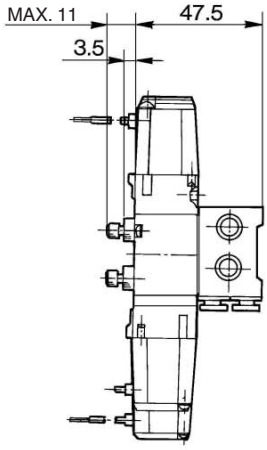

□: With light/surge voltage suppressor

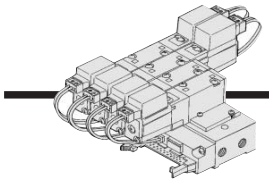

Type 41P Flat Ribbon Cable Manifold: Side Ported

VV5Z3-41P-Station-M5

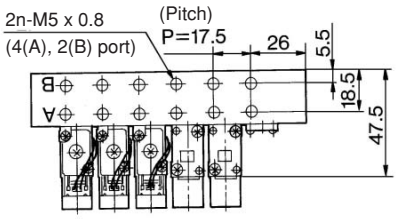

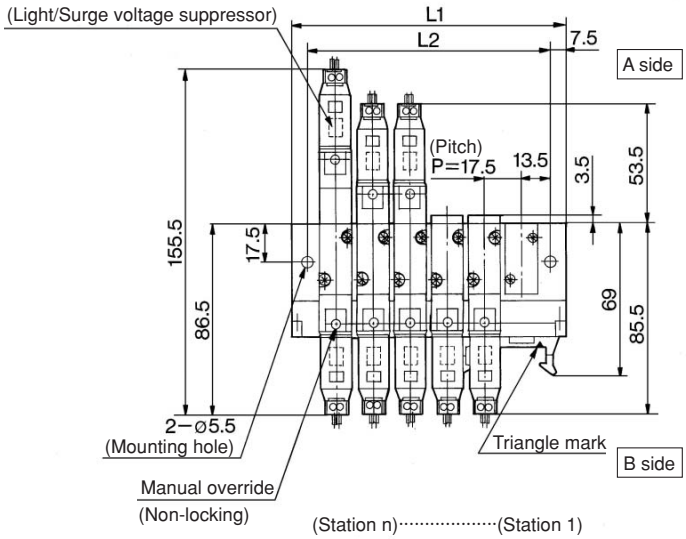

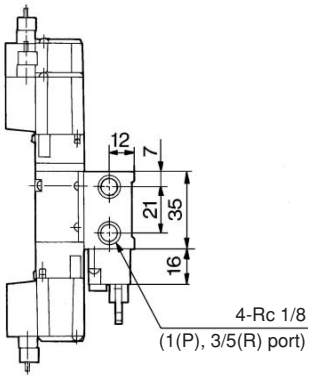

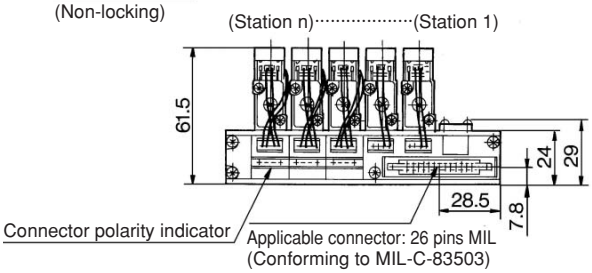

Built-in speed controllers

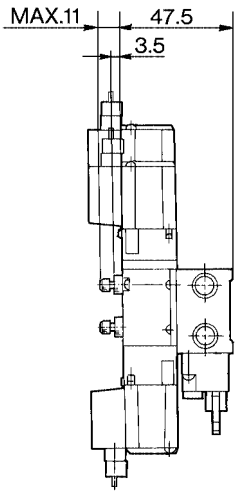

(mm)

Stations	3	4	5	6	7	8	9	10	11	12
L_1	77	94.5	112	129.5	147	164.5	182	199.5	217	234.5
L_2	62	79.5	97	114.5	132	149.5	167	184.5	202	219.5

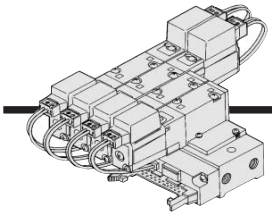

Type 43P Flat Ribbon Cable Manifold: Side Ported

VV5Z3-43P-Station-C4

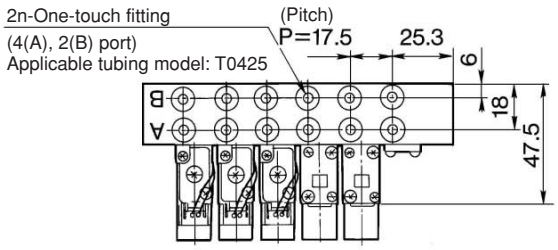

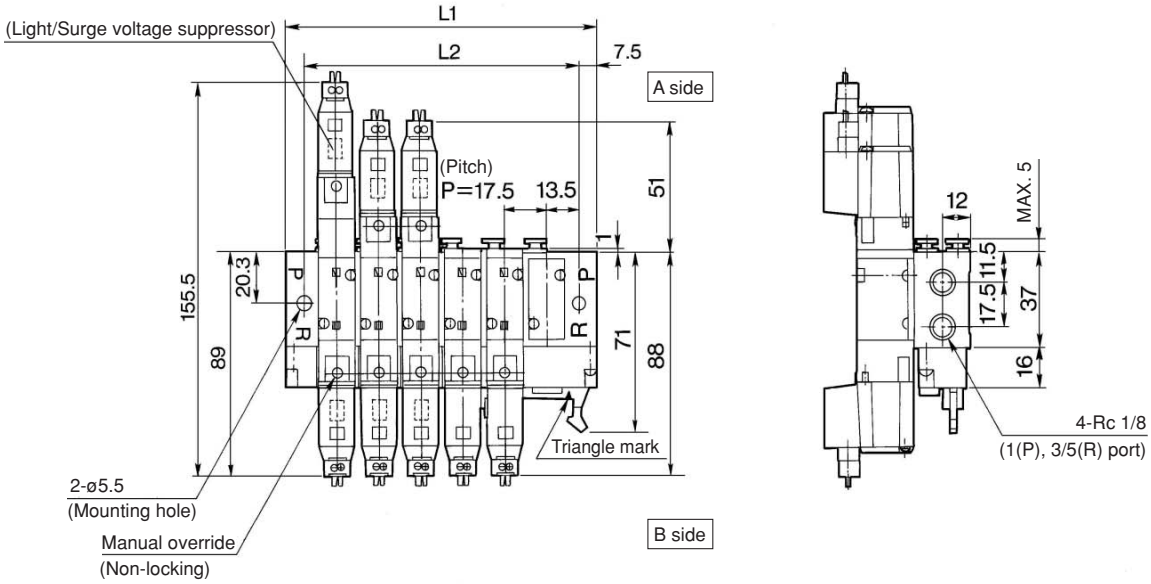

Built-in speed controllers

(mm)

Stations	3	4	5	6	7	8	9	10	11	12
L_1	77	94.5	112	129.5	147	164.5	182	199.5	217	234.5
L_2	62	79.5	97	114.5	132	149.5	167	184.5	202	219.5

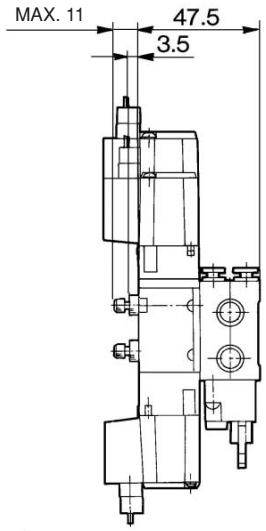

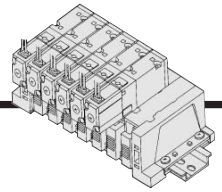

Type 45 DIN Rail Manifold (Non Plug-in): Side Ported

VV5Z3-45-Station D-C4C/C6C

Grommet (G), (H)

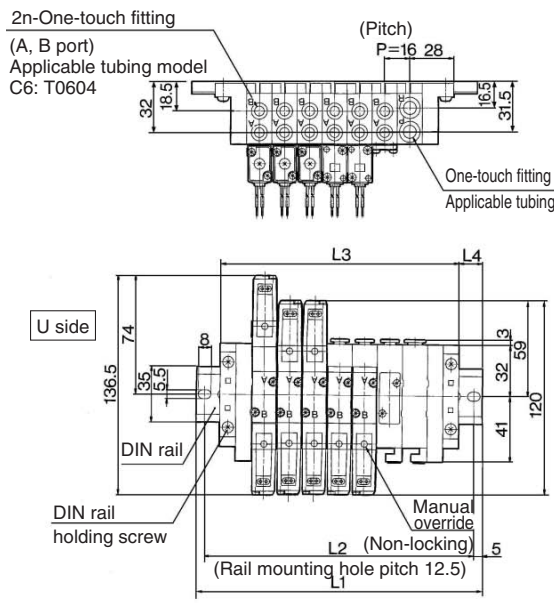

C4

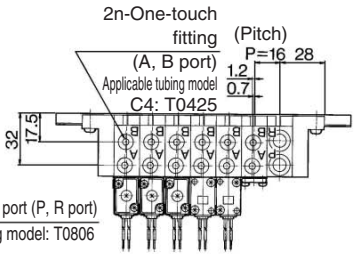

VV5Z3-45-Station B-C4C/C6C

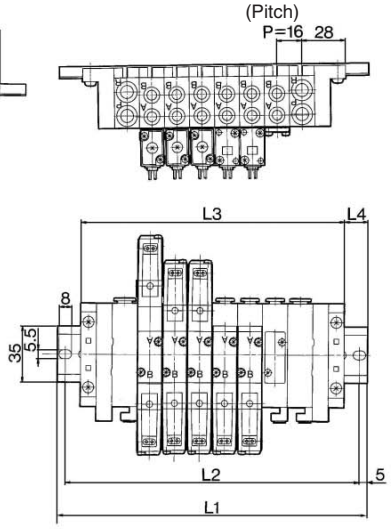

(mm)

Stations	2	3	4	5	6	7	8	9	10
L_1	135.5	148	160.5	185.5	198	210.5	223	248	260.5
L_2	125	137.5	150	175	187.5	200	212.5	237.5	250
L_3	104	120	136	152	168	184	200	216	232
L_4	16	14	12.5	17	15	13.5	11.5	16	14

(mm)

Stations	11	12	13	14	15	16	17	18	19	20
L_1	273	298	310.5	323	335.5	360.5	373	385.5	398	423
L_2	262.5	287.5	300	312.5	325	350	362.5	375	387.5	412.5
L_3	248	264	280	296	312	328	344	360	376	392
L_4	12.5	17	15.5	13.5	12	16.5	14.5	13	11	15.5

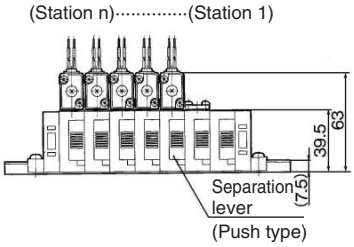

(mm)

Stations	2	3	4	5	6	7	8	9	10
L_1	110.5	135.5	148	160.5	185.5	198	210.5	223	248
L_2	100	125	137.5	150	175	187.5	200	212.5	237.5
L_3	88	104	120	136	152	168	184	200	216
L_4	11.5	16	14	12.5	17	15	13.5	11.5	16

VV5Z3-45-Station U-C4C/C6C

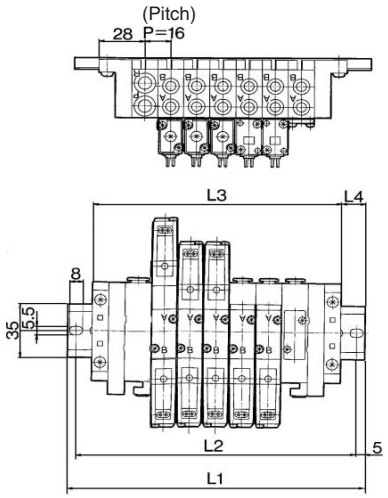

(mm)

Stations	2	3	4	5	6	7	8	9	10
L_1	110.5	135.5	148	160.5	185.5	198	210.5	223	248
L_2	100	125	137.5	150	175	187.5	200	212.5	237.5
L_3	88	104	120	136	152	168	184	200	216
L_4	11.5	16	14	12.5	17	15	13.5	11.5	16

L plug connector (L)

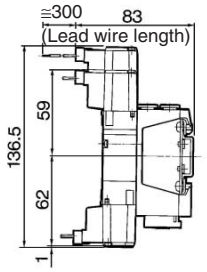

M plug connector (M)

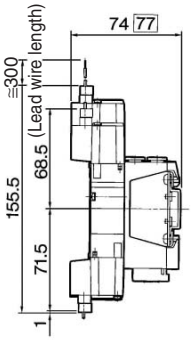

DIN terminal (D)

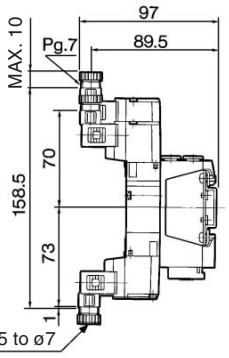

□: With light/surge voltage suppressor

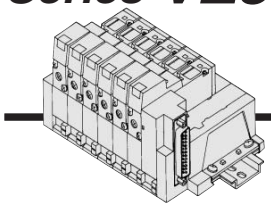

Type 45F DIN Rail Manifold (Non Plug-in): Side Ported

VV5Z3-45FD-Station-C4C / C6C

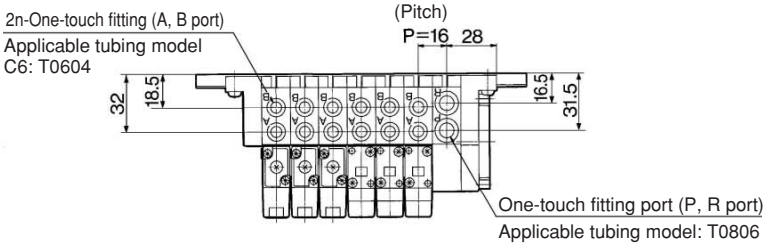

C4

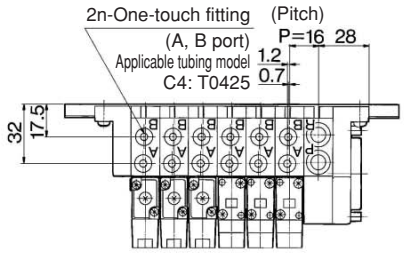

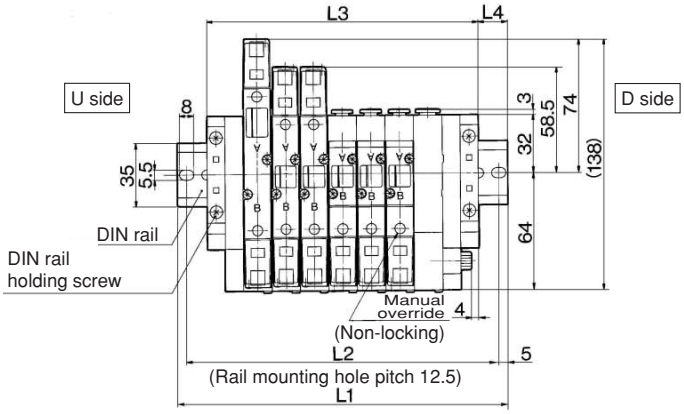

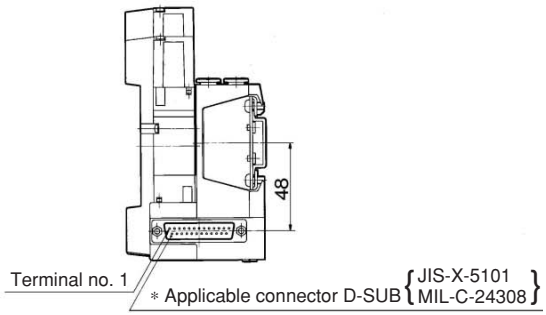

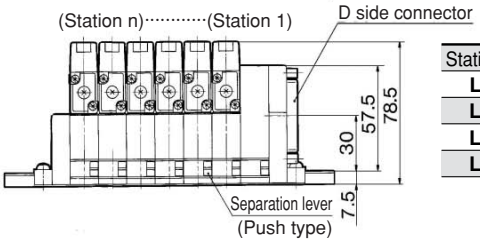

(mm)

Stations	2	3	4	5	6	7	8	9	10
L_1	110.5	135.5	148	160.5	185.5	198	210.5	223	248
L_2	100	125	137.5	150	175	187.5	200	212.5	237.5
L_3	88	104	120	136	152	168	184	200	216
L_4	11.5	16	14	12.5	17	15	13.5	11.5	16

VV5Z3-45F$^{U}_{D}$-Station B-C4C / C6C (2 to 10 stations)

VV5Z3-45FB-Station-C4C / C6C (11 to 20 stations)

VV5Z3-45FU-Station-C4C / C6C

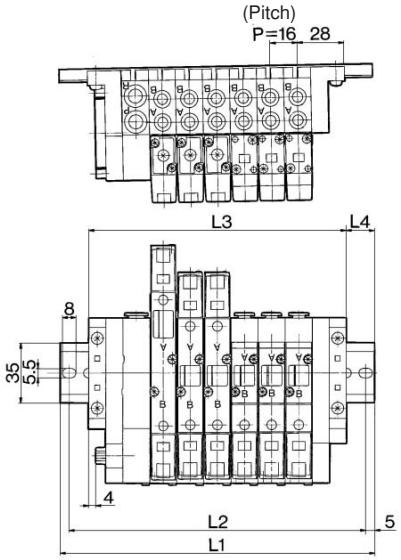

(mm)

Stations	2	3	4	5	6	7	8	9	10
L_1	110.5	135.5	148	160.5	185.5	198	210.5	223	248
L_2	100	125	137.5	150	175	187.5	200	212.5	237.5
L_3	88	104	120	136	152	168	184	200	216
L_4	11.5	16	14	12.5	17	15	13.5	11.5	16

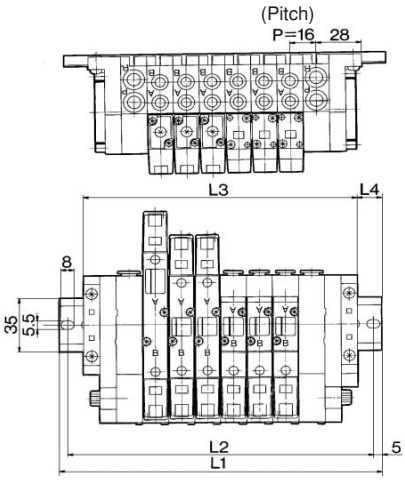

(mm)

Stations	2	3	4	5	6	7	8	9	10
L_1	135.5	148	160.5	185.5	198	210.5	223	248	260.5
L_2	125	137.5	150	175	187.5	200	212.5	237.5	250
L_3	104	120	136	152	168	184	200	216	232
L_4	16	14	12.5	17	15	13.5	11.5	16	14

(mm)

Stations	11	12	13	14	15	16	17	18	19	20
L_1	273	298	310.5	323	335.5	360.5	373	385.5	398	423
L_2	262.5	287.5	300	312.5	325	350	362.5	375	387.5	412.5
L_3	248	264	280	296	312	328	344	360	376	392
L_4	12.5	17	15.5	13.5	12	16.5	14.5	13	11	15.5

Made to Order Specifications:

Please contact SMC for detailed specifications, dimensions, and delivery.

1. Solenoid Valve: External Pilot Specifications

Applicable solenoid valve series

VZ3000/5000
(Non plug-in type only)

Model no.

VZ3/5□□0–□□□□(–□)–X20

Entry is the same as standard products.

Specifications

Operating pressure range (MPa)	Main pressure	–100 kPa to 0.7
	External pilot pressure	0.15 to 0.7
Pilot exhaust method		Pilot valve individual exhaust

Dimensions

VZ3000: 8 mm longer
VZ5000: 8 mm longer

JIS Symbol

Body ported

2 position single

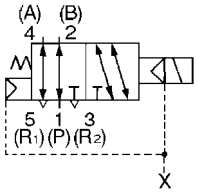

3 position closed center

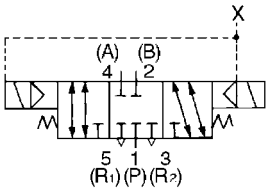

2 position double

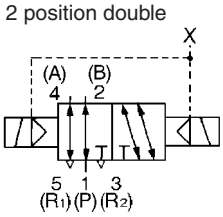

3 position exhaust center

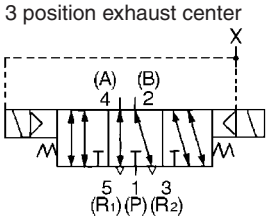

3 position pressure center

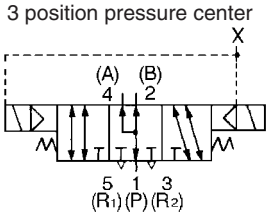

Made to Order Specifications:

Please contact SMC for detailed specifications, dimensions, and delivery.

2. Solenoid Valve: Special Manual Override

Applicable solenoid valve series

VZ3000
(Non plug-in type only)

Model no.

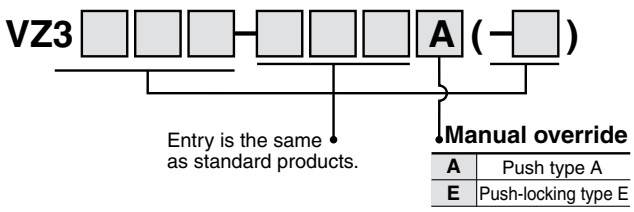

A	Push type A
E	Push-locking type E

Dimensions: Single

Push type A

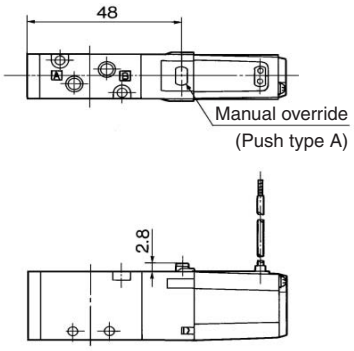

Push-locking type E

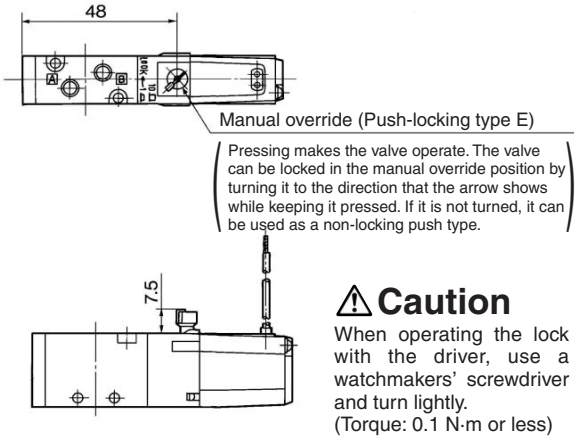

⚠ Caution

When operating the lock with the driver, use a watchmakers' screwdriver and turn lightly.
(Torque: 0.1 N·m or less)

Note) Because the manual override unit protrudes, the manual override could activate unintentionally if the protrusion is touched or an object falls on it. Therefore, take the proper preventative measures.

3. Solenoid Valve: Opposite Mount of Solenoid Assembly

Applicable solenoid valve series

VZ1000/3000/5000
(Non plug-in type only)

Model no.

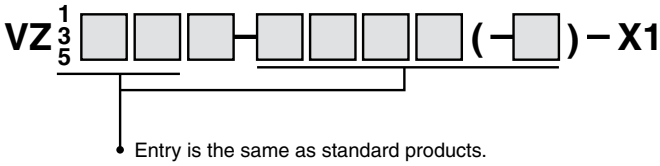

Dimensions: VZ1120-□G-M5-X1

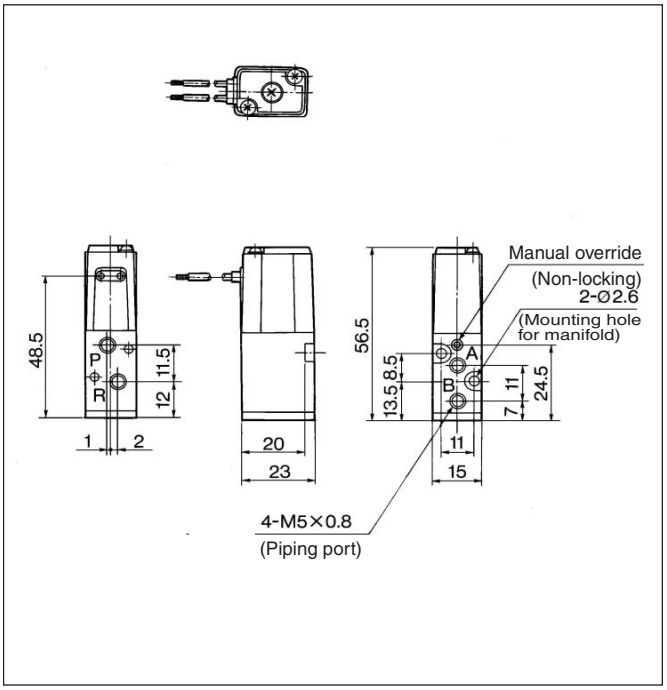

Made to Order Specifications:

Please contact SMC for detailed specifications, dimensions, and delivery.

4. Manifold: Common SUP/Individual EXH Type

Applicable solenoid valve series
VZ3000

Common SUP/Individual EXH type
VV5Z3-21-□3

Specification

Common SUP/Individual EXH type	
1(P) port	Rc 1/8
3/5(R) port	M5 x 0.8
4(A), 2(B) port	Valve

Model no.

VV5Z3 − 21 − 05 3 − □

Stations

02	2 stations
⋮	⋮
20	20 stations

P port thread type

Nil	Rc
00F	G
00N	NPT
00T	NPTF

Applicable solenoid valve
VZ3□2□-□ G/L/M/D □□- M5/C4/C6

Applicable blanking plate assembly
DXT192-13-1A

Applicable throttle valve
DXT154-34-1A

Applicable silencer
AN120-M5

Note) Refer to page 3-3-25 for manifold option.

Dimensions: Grommet Type

Note) To use the VZ3□23 with a throttle valve mounted on it, open the throttle valve one turn or more from the fully closed position.

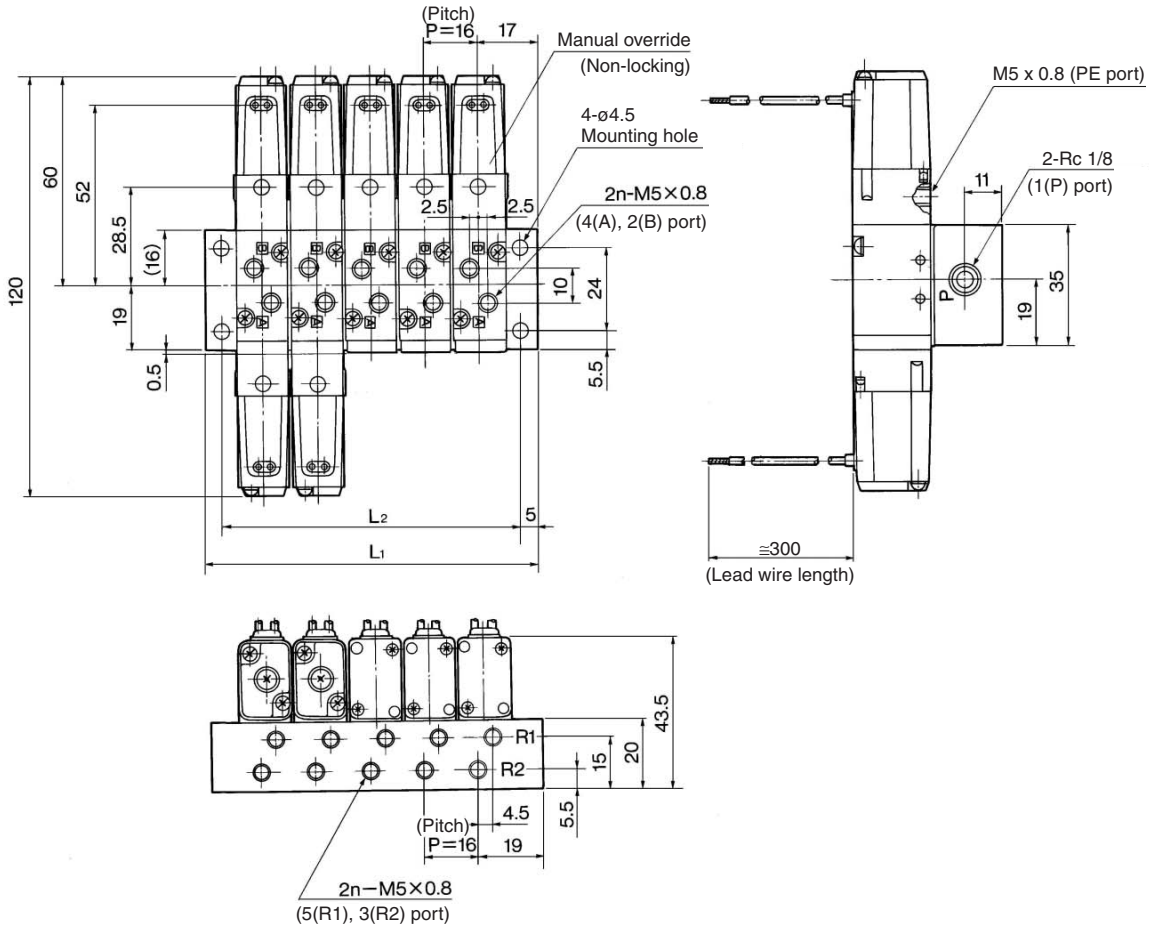

(mm)

Stations	2	3	4	5	6	7	8	9	10	11	12	13	14	15	16	17	18	19	20
L_1	50	66	82	98	114	130	146	162	178	194	210	226	242	258	274	290	306	322	338
L_2	40	56	72	88	104	120	136	152	168	184	200	216	232	248	264	280	296	312	328